ORBITAL 4.0 WELDING

Made in Germany

ORBITEC®

orbital welding

www.orbitec-group.com

ORBITAL WELDING

PRODUCT CATALOGUE

January 2026

DIN EN ISO 9001 certified

Since 1984

Orbitec – your one-stop shop

Orbital welding is an essential part of today's industry and is always used when high-quality weld joints and reproducibility are required. Orbitec is a specialist in this field and offers you as a customer comprehensive services from a single source.
Purchase, rent and lease and receive services and training directly from the manufacturer, with a single contact person to answer all your questions.

Orbital welding – the foundation of industrial manufacturing

Modern orbital welding solutions are needed in many applications. The superior quality of these solutions and the seams quality make the use of relevant orbital welding equipment an absolute must in many industrial areas. To name a few examples: The technology is used in the semiconductors, aviation and aerospace engineering, pharmaceuticals, chemicals, food and beverage, shipbuilding, boilers and heat exchangers, oil and gas, petrochemicals and renewable energies segments.
There are also many other industrial applications where only orbital welding meets the necessary quality requirements.

TABLE OF CONTENTS

	Page
NEW ARRIVALS	04 – 05
COMPANY	06 – 07
EXPLANATION OF THE PROCESS	08
AREAS OF APPLICATION	09
PRODUCTS	10 – 66
· Orbital welding controllers and inverters	10
· Cooling units and accessories	20
· Enclosed weld heads	23
· Open-frame weld heads	29
· Adaptations	32
· Turn table	34
· Wire feed units	36
· Tube-to-tubesheet weld heads	37
· Workstation accessories	43
· Tungsten electrodes	46
· Tungsten grinder	47
· Torch consumables	48
· Tube saw and accessories	51
· Tube squaring systems	54
· Purging accessories	59
· Oxygen and purge pressure analysers	62
SPECIAL OFFERS	
· 'Old-for-New' replacement	33
SERVICE	67 – 68
· Rental service	67
· Repair service	67
· Financing	67
· Contract work	67
· Training	68
INFO CENTRE	69 – 72
· General Terms and Conditions of Warranty	69
· General Terms and Conditions of Business	70
· General Terms and Conditions of Hire	71
· Table of tube outer diameters	72

NEW ARRIVALS

EVO 200 WP or LITE

Two new extremely compact and lightweight orbital welding systems with colour touchscreens and numerous new features, extremely simple user guidance, efficient and reliable, with Industry 4.0 technology.

EVO Cool water cooling unit

New powerful and compact cooling unit, can be mounted on EVO 200 WP or LITE, for water-cooled applications.

EVO Modular WP or LITE

The EVO series with industry standard 4.0 technology is now also available in two modular versions in a case.

EVO remote control via tablet

Robust 10" industrial tablet with bar code scanner and docking station with complete wireless access to all EVO controllers (the user interface is mirrored 1:1).

Gas controller box

Digital control, regulation and documentation of up to three gases (welding gas, purging gas and other gas) in connection with the EVO WP series.

Switchbox

For increasing productivity and alternate welding with two welding tools.

TIGTRONIC Orbital 5.2, 5.3 and 5.4

The 5th generation of the tried and tested Tigtronic controllers with the latest technology of all built-in electronic components, powerful and efficient.

OSK 13 S clamping block for micro fitting

OSK 13 S clamping blocks for tube-tube connections with the matching collets and for tube-fitting connections.

OSK 21 CB weld head with clamping block for tube to tube connection

for welding without prior manual tacking.

OSW 275

In addition to the existing OSW series of weld heads, the OSW 275 is now also available for outer diameters of 88.9 – 273 mm / 3.500 – 10.748" with a decouplable rotor.

Turn 230 S

Reworked turn table with three-jaw chuck axis adjustment and robust articulated arm with central mechanical clamping and also with adjustable tube support as an option.

Oxy EVO bzw. Oxy EVO PPA

New oxygen analyser, also with integrated purge pressure analyser as an option, with colour touch display, digital and analogue interfaces, plus Bluetooth for communication with the existing and the new controllers and other PLCs.

COMPANY

Orbitec was founded in 1984.

Orbitec develops and manufactures orbital welding equipment for hire and sale worldwide.

Orbitec aims to provide high-quality and easy-to-use products at a reasonable price.

Orbitec supplies products and services to the likes of the pharmaceuticals, biotechnology, semiconductors, food and beverage, and aviation and aerospace industries.

DIN EN ISO 9001 certified

Since 1984

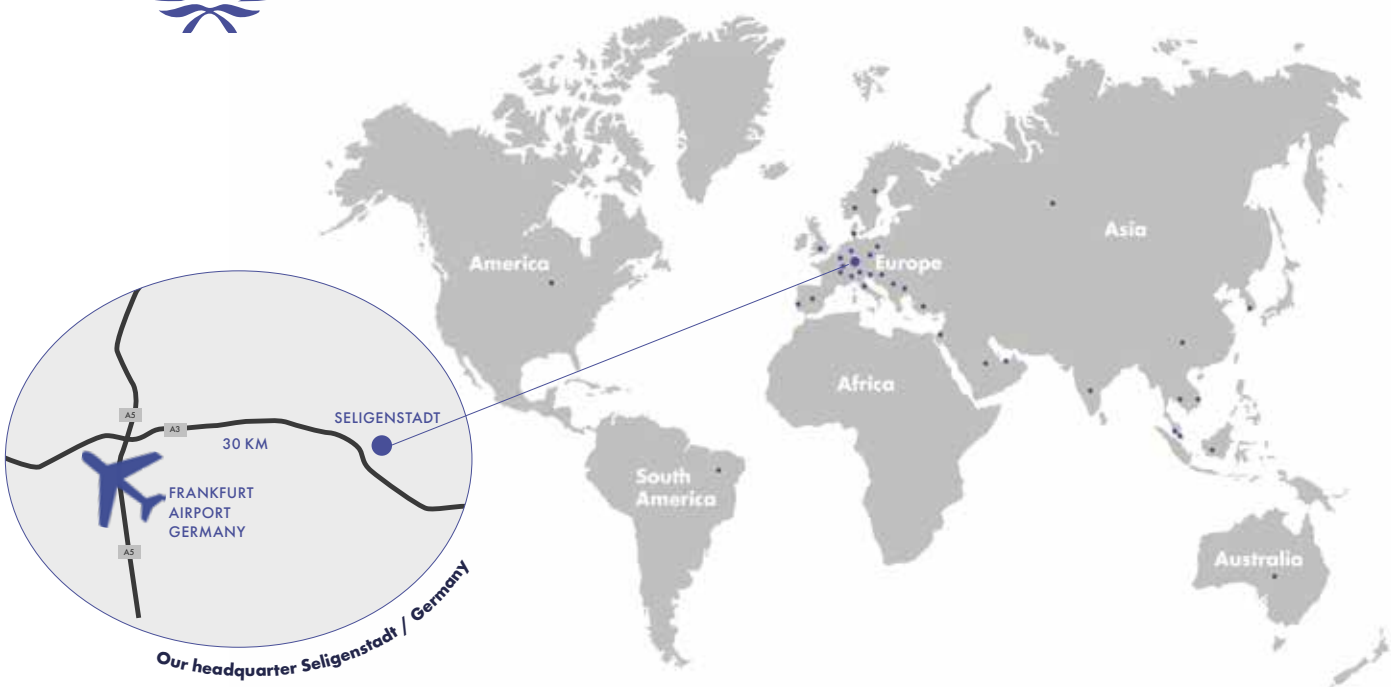

Australia / Austria / Baltic States / Belgium / Bosnia-Herzegovina / Brazil / Bulgaria / China / Croatia / Czech Republic / Denmark / France / Great Britain / Hong Kong / India / Indonesia / Israel / Italy / Luxembourg / Macedonia / Malaysia / Netherlands / Norway / Poland / Portugal / Russia / Saudi-Arabia Serbia / Singapur / Slovenia / South Korea / Spain / Sweden / Switzerland / Taiwan / Thailand / Turkey / USA /United Arab Emirates / Vietnam

APPLICATION-RELATED EXPERTISE

Particularly customers who are new to buying an orbital welding system will be initially confronted by a wealth of pertinent questions and problems. It's not all simply done at the 'press of a button'!
There are a whole host of conditions that need to be met for orbital welding technology to be used economically.
In this respect, Orbitec provides you with application-related expertise and customer proximity.
And it also goes without saying that we offer extremely short response times and high product availability.

INNOVATIVE, PRACTICAL AND AFFORDABLE!

Present on the market and ISO 9001 certified since 1984, Orbitec is the world's leading supplier of TIG orbital welding technology for outer diameters up to 275 mm.

In addition to welding technology, we offer complete solutions for tube cutting, dressing, purging, measuring residual oxygen and monitoring internal pressure.

Orbitec is a pioneer when it comes to innovations! Tigtronic systems with autoprogramming were launched on the market back in 1996, while the most compact, modern and user-friendly generation of EVO controllers featuring Industry 4.0 technology entered the market in 2019.

There are numerous kinds of orbital welding system, in modular or compact versions, tailored to suit different industry sectors and needs.

With cassette weld heads, the handle and cable assembly and weld head are separate.

A single handle and cable assembly can be used to operate multiple weld heads.

The weld heads' collets can also be used with a suitable facing device.

Almost all welding tools are available in gas- and water-cooled versions.

Orbitec welding tools can be adapted to competitor products, and competitor weld heads can be adapted to Orbitec controllers.

Orbitec is an innovation leader when it comes to developing and linking peripheral devices, such as oxygen analysers or internal pressure measuring devices, and connecting them to and exchanging data with the orbital welding controller.

All the equipment is very user-friendly, robust and affordable.

EXAMPLE: MANY ENCLOSED WELD HEADS WITH A SINGLE HANDLE AND CABLE ASSEMBLY

EXPLANATION OF THE PROCESS

We talk about the TIG (=tungsten inert gas) process, which you'll be familiar with from TIG manual welding, only it's partially mechanised.

During the welding process, the arc moves around a fixed tube or tube preform in a circular path (orbit). Mechanising and controlling the welding process guarantees a high level of reproducibility and the lowest possible error rate, combined with complete documentation.

The pulse technology used, combined with state-of-the-art inverter and controller technology, enables control of the weld pool in all positions.

Different types of welding tools are the tungsten electrode carrier or the TIG torch.

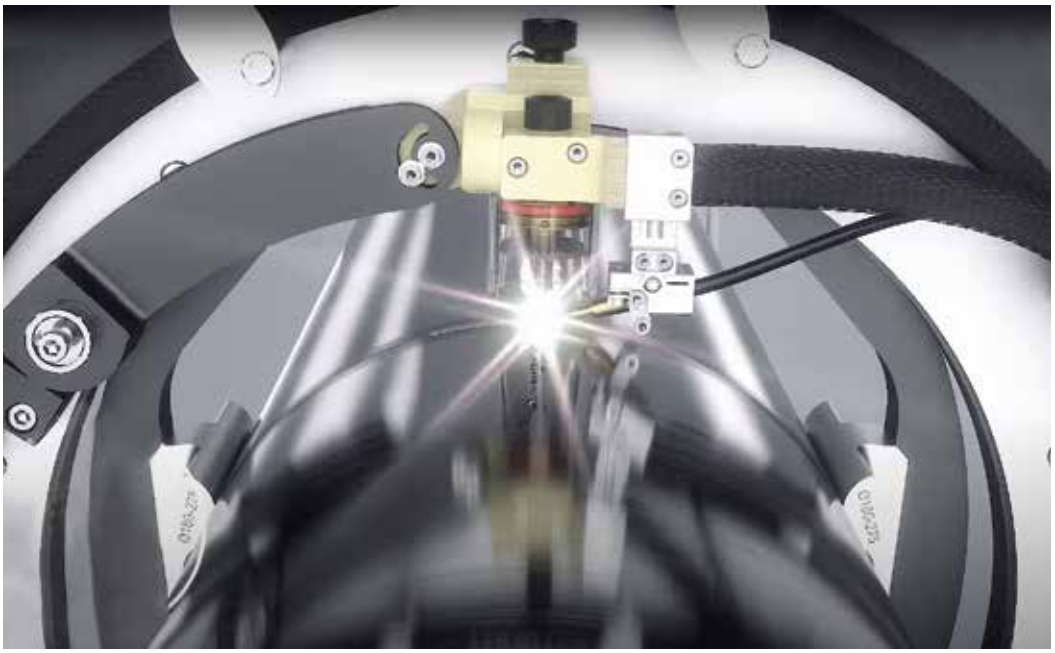

EXAMPLE: OSW OPEN WELD HEAD

AREAS OF APPLICATION

Orbital welding solutions are used in many applications. The joints' special quality makes using orbital welding equipment an absolute must in many areas.

You will find the most popular segments listed below.

Semi-conductors

Pharmaceuticals / chemicals

Aviation and aerospace engineering

Food / dairy / beverage industry

Shipbuilding

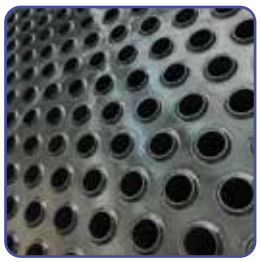

Boilers and heat exchangers

Oil and gas

Offshore

Power plants

Renewable energies

Petrochemicals

Innovative orbital welding systems

ORBITAL CONTROLLERS AND INVERTERS

The EVO Industry 4.0 series is new to the market. Several systems, initially compact as the 200 A Autorange and now also modular in connection with the Tetrix inverters.

The systems are small, lightweight and handy and offer a high-resolution colour display, multilingual intuitive user guidance due to a colour touch interface, or alternatively operation using a membrane keyboard, a stable operating system (without data loss during power outages and quickly ready for use again), full access through tablet with QR-code scanner, data transfer via USB, LAN and WLAN, fault analysis program, manufacturer support via remote maintenance, a mountable cooling unit as an option, and many other functions. Depending on the model, the systems are equipped with different features. Individual features can be added for a surcharge.

The EVO 200 WP, for example, has an analogue Turbo Purge function as standard. When the Turbo Purge function is activated, before and after the welding process the cassette weld head is purged with an increased amount of gas (setting using the analogue knob on the controller and digital display). Shortly before the welding process, the amount of gas is reduced to the amount required for the cassette weld head. This substantially shortens the welding process and achieves better welding results by precisely controlling the amount of gas.

In the case of the optional digital Turbo Purge function available for the EVO WP series, the gas flow is continuously measured and regulated by a gas flow controller. The amount of gas is set digitally on the display and saved in the program for future welding processes.

With the optional available Gas Controller Box, the Turbo Purge function can also be used with the EVO Modular WP.

During periods of high productivity, the cassette weld head can be preserved by activating the permanent gas function to extend the service life of the tungsten electrodes.

FEATURES	EVO 200 LITE	EVO 200 WP	EVO MODULAR LITE	EVO MODULAR WP
High-resolution 10.1" colour touch display	•	•	•	•
Robust display transport protection	•	•	•	•
Separate control panel for alternative operation	•	•	•	•
Extremely simple, intuitive user guidance with autoprogramming	•	•	•	•
Graphics-supported multilingual user interface	•	•	•	•
Metric and imperial units	•	•	•	•
Orbital tacking mode activatable		•		•
Integrated wire card		•		•
Analogue Turbo Purge		•		•
Permanent gas function	•	•	•	•
Real-time monitoring of the welding parameters	•	•	•	•
Continuous monitoring of all parameters such as welding speed, arc voltage, welding current, welding time, angle degrees, gas, water, residual oxygen, pressure	•	•	•	•
Rotor stop function for increased safety	•	•	•	•
4 GB flash memory for programs and documentation	•	•	•	•
Integrated thermal printer (longlife paper) with multilingual printing of actual / target parameters		•		•
Data transfer via USB	•	•	•	•
Data transfer via LAN / WLAN		•		•
Integrated help menu in the device	•	•	•	•
Fault analysis program	•	•	•	•
Remote maintenance	•	•	•	•

ORBITAL WELDING CONTROLLERS

EVO 200 LITE, EVO 200 WP

OPTIONAL	EVO 200 LITE	EVO 200 WP	EVO MODULAR LITE	EVO MODULAR WP	Item number
UPGRADE KIT I/0 INTERFACE FOR GAS CONTROLLER BOX		•		•	1.3.7208
QR CODE SCANNER INCL. SOFTWARE AND QR CODE GENERATOR FOR PC FOR USER LOGIN AND ACCESSING THE WELDING PROGRAMS		•		•	1.3.7009
OPTION OF CONNECTING COMPETITOR WELD HEADS		•		•	1.3.7005
DIGITAL TURBO PURGE		•			1.3.7007
AVC CARD FOR DC MOTORS (TURN)	•	•	•	•	1.3.7003
AVC CARD FOR STEP MOTORS (RBK S) INCL. Y-CABLE	•	•	•	•	1.3.7004
WIRE CARD	•	▲	•	▲	1.3.7006
COOLING UNIT THAT CAN BE MOUNTED AS AN OPTION	•	•	•	•	

EVO with mounted transport protection

Transport protection onthe rear

▲ = EVO 200 WP STANDARD EQUIPMENT

EVO 200 WP ORBITAL WELDING SYSTEM (Autorange)
Technical data:

Type of current	DC
Mains voltage	AC 1 x 230 V +/- 15% AC 1 x 115 V +/- 15%
Mains frequency	50 / 60 Hz
Max. primary reserve power	6 kVA
Rec. generator output	9 kVA
Control range	5 – 200 A
Welding current	25% ED TIG 200 A 60% ED TIG 150 A 100% ED TIG 120 A
Weight:	16.8 kg
Dimensions (L x W x H):	500 x 340 x 360 mm

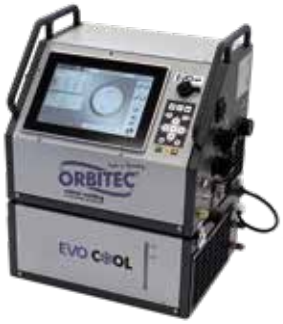

EVO with mounted EVO COOL cooling unit

Package includes:
- Orbital welding system
- Display transport protection
- Calibration certificate
- USB stick

Optional:
DISPLAY PROTECTION TRANSPARENT — 1.3.7000311

EVO 200 WP ORBITAL WELDING SYSTEM (Autorange) — 1.3.7000
EVO 200 LITE ORBITAL WELDING SYSTEM (Autorange) — 1.3.7001

EVO MODULAR WP ORBITAL WELDING SYSTEM (Autorange) — 1.3.7101
EVO MODULAR LITE ORBITAL WELDING SYSTEM (Autorange) — 1.3.7100
Connection to TETRIX 200 or TETRIX 351

Compact and light with the external dimensions (L x W x H) 405 x 325 x 170 mm and weighing only 9.7 kg.

Optional:
- Water Cooling Unit COOL 50 or EVO COOL

QR CODE SCANNER — 1.3.7009
incl. software and QR code generator for PC for user login and accessing the welding programs

Item number

1.3.7010

EVO REMOTE CONTROL VIA 10" INDUSTRIAL TABLET WITH BARCODE SCANNER, DOCKING STATION AND BACKSTRAP
Robust 10" tablet as wireless remote control for all EVO orbital welding systems.

The user interface of the EVO controller is mirrored 1:1, providing full access with all functions. As the data is sent over WLAN/LAN, there is no delay to the controls or display. The range complies with common WLAN/LAN standards and can therefore be easily amplified or extended.

The tablet has an integrated 2D barcode or QR code scanner for user login and to access the welding programs.

The tablet can be used as a mobile device and in the stationary docking station.

Technical Data:

Display:	10.1" (25.65 cm) capacitive touch display
CPU:	Intel® Atom™ with Intel® Burst Frequency technology
Graphics card:	GPU Intel® HD 400 Graphics
Memory:	4 GB RAM, 64 GB eMMC
Connections:	WLAN, Bluetooth
Scanner:	QR-code scanner
Ports:	1x USB 2.0, 1x micro USB 2.0, HDMI, audio, docking port
Military standard:	MIL-STD 810G
Protection rating:	IP65
Battery life:	Up to 8 hours
Dimensions (LxWxH):	22 x 275.5 x 187.5 x mm
Weight:	1 kg

Package includes:
- Tablet
- Docking station
- Backstrap
- Power supply unit

Item number

GAS CONTROLLER BOX

The Gas Controller Box enables to control up to three gases during welding and regulate them through the EVO WP controllers. The welding, the purging, and an additional gas (e.g., for a trailing nozzle, for flooding a gas cover or a housing) can be monitored, regulated, completely documented, and stored in the EVO controllers. All welding and purging gases that are used for TIG welding are memorized in the controller menu.

TECHNICAL DATA:

Control range	1 – 54 l/min.
Gases	Ar, He, N2, H2 (and mixed gases)
Gas connection	6 mm Push-In-Fitting in and out
Weight	0.9 kg
Dimensions (L x W x H)	180 x 220 x 100 mm

PACKAGE INCLUDES:

- Water- and dustproof Peli case.
- 1, 2 or 3 assembled mass flow controllers
- Connection cable Gas Controller Box / EVO WP controller

GAS CONTROLLER BOX (1 GAS)	**1.3.7201**
GAS CONTROLLER BOX (2 GASES)	**1.3.7202**
GAS CONTROLLER BOX (3 GASES)	**1.3.7203**

SWITCHBOX

1.3.9000

Switchbox for welding with two welding heads.

To increase productivity, the switch box can be used to weid alternately in conjunction with a controller from the EVO series with two weid heads. All welding tools can be used, i.e., enclosed weid and open frame weid heads, turn tables or tube-to-tube sheet weid heads, gas or water cooled, with or without wire feed or AVC.

By pressing the start button on the weid head, the welding program suitable for the respective weid head will get loaded.

The weid head that is not being used is locked and can get prepared for the next welding.

PACKAGE INCLUDES:

- Switchbox
- Control cables, gas hose, welding cables from EVO series to Switchbox

Technical data:

Mains voltage	100-240V (0,6-0,3A)
Mains frequency	50 / 60 Hz
Switching capacity:	24V 200A (100% ED)
Protection class:	IP 23
Dimensions (L x W x H)	500 x 340 x 160 mm
Weight	7.8 kg

EVO 200 WP
mit montierter Switchbox

REGISTER YOUR ORBITEC PRODUCT AT

www.orbitec-group.com/ en/ productregistration

to benefit from free software updates and to receive information about new products, etc.

Item number

ORBITAL 5.2
- OSK
- OSW
- TURN
- RBK
- (AVC)

TIGTRONIC ORBITAL 5.2 CONTROLLER (Autorange) — **1.3.0052**

The 5th generation of our reliable, tried-and-tested standard controller.
Can be connected to TETRIX 200 or TETRIX 351.

- 5.7" display
- Extremely simple multilingual user guidance thanks to programming support (entry of tube outer diameter, wall thickness and weld head indicator)
- Monitoring of gas and water cooling
- Option of welding in up to SIX sectors, in continuous or step travel mode
- Individual modification of the calculated program parameters, also using current percentage button
- Graphic display of the welding progress
- Real-time monitoring of the welding parameters
- Integrated day counter (assignment to isometries and weld joint numbers)
- Storage of up to 99 welding programs
- Storage of up to 400 actual parameters
- Data transfer of welding parameters and programs via USB interface
- Software updates via USB possible
- Error tracking program
- Option of connecting a remote control (the controller can also be operated from the display without a remote control)
- Connection for oxygen and purge pressure analysers
- Compact and lightweight with outer dimensions of (L x W x H) 405 x 325 x 170 mm and a weight of only 8.3 kg
- Autorange 100 – 240 V

Optional:
- COOL 50 or EVO COOL cooling unit
- AVC upgrade kit

ORBITAL 5.3
- OSK
- OSW
- TURN
- ORBIFEED
- RBK
- (AVC)

TIGTRONIC ORBITAL 5.3 CONTROLLER (Autorange) — **1.3.0053**

As for Orbital 5.2
- With special software only for RBK tube-to tubesheet weld heads

Item number

TIGTRONIC ORBITAL 5.4 CONTROLLER (AUTORANGE) — 1.3.0054

The 5th generation of our reliable, tried-and-tested standard controller.
Can be connected to TETRIX 200 or TETRIX 351.

- 5.7" display
- Extremely simple multilingual user guidance thanks to programming support (entry of tube outer diameter, wall thickness and weld head indicator)
- Monitoring of gas and water cooling
- Orbital tacking mode can be activated
- Option of welding in up to SIX sectors, in continuous or step travel mode
- Individual modification of the calculated program parameters, also using current percentage button
- The current and wire feed parameters can also be changed during welding
- Graphic display of the welding progress
- Real-time monitoring of the welding parameters
- Integrated day counter (assignment to isometries and weld joint numbers)
- Storage of up to 99 welding programs
- Storage of up to 400 actual parameters
- Data transfer of welding parameters and programs via USB interface
- Software updates via USB possible
- Error tracking program
- Option of connecting a remote control (the controller can also be operated from the display without a remote control)
- Connection for oxygen and purge pressure analysers
- Integrated wire card
- Integrated thermo printer (longlife paper) with multilingual printout of actual / taget parameres
- Compact and lightweight with outer dimensions of (L x W x H) 405 x 325 x 170 mm and a weight of only 8.3 kg
- Autorange 100 – 240 V

ORBITAL 5.4
- OSK
- OSW
- TURN
- ORBIFEED
- RBK
- (AVC)

Optional:
- COOL 50 or EVO COOL cooling unit
- AVC upgrade kit

Package includes:
- Controller
- Power cable
- Controller / power source interface cable
- USB stick
- 2 pieces tungsten boxes
- Pen with touch screen function and LED light

AVC UPGRADE KIT FOR TIGTRONIC CONTROLLERS
AVC CARD FOR DC MOTORS UPGRADE KIT (Turn) — 1.3.0031
for Tigtronic controllers

AVC CARD FOR STEP MOTORS UPGRADE KIT (RBK S) — 1.3.0036
for Tigtronic controllers

		Item number
	DOCUTRONIC 2.2 SOFTWARE FOR DOCUMENTATION For all Tigtronic controllers for backing up, managing and editing the weld joint documentation (actual / target parameters) at the PC in German and English	**1.3.0207**
	ORBICONTROL 3 REMOTE CONTROL 8 m cable remote control for all orbital welding controllers. · Activation and deactivation of the welding process · Rotary movement control · Wire feed control · AVC control · Visual status display	**1.3.0030**
	BRACKET FOR REMOTE CONTROL ORBICONTROL 3 8 m cable remote control for all orbital controls.	**1.3.003003**
	SPARE LONG-LIFE PAPER ROLLS FOR EVO AND TIGTRONIC CONTROLLERS 5 Paper rolls for built-in printers 3-pack (shelf life 10 years)	**1.3.0035**
	SPARE PAPER ROLLS FOR TIGTRONIC CONTROLLERS 4 Paper rolls for integrated printer, pack of three	**1.3.0002**
	SPARE RIBBON CARTRIDGE FOR CONTROLLERS WITH INTEGRATED PRINTER Ribbon cartridge for TIGTRONIC ORBITAL 4 integrated printer	**1.3.0003**

Item number

TETRIX 200 INVERTER, control range 5 – 200 A / 230 V **1.2.0119**
Lightweight and compact inverter power source for TIG manual or orbital welding (automatic detection) in conjunction with all Orbitec controllers.

Optional: COOL 50 water cooling unit.

Technical data:

Type of current	DC
Mains voltage	AC 1 x 230 V
Mains frequency	50 / 60 Hz
Max. primary reserve power	4.4 kVA
Rec. generator output	7.5 kVA
Control range	5 A – 200 A
Welding current	
· 25% ED TIG	200 A
· 60% ED TIG	150 A
· 100% ED TIG	120 A
Weight	8.9 kg
Dimensions (L x W x H)	475 x 180 x 295 mm

Package includes:
· Inverter
· Primary cable

TETRIX 200 INVERTER (Autorange), Control range 5 – 200 A / 110 / 230 V **1.2.0120**
As TETRIX 200 inverter, but it recognises the 115 V AC or 230 V AC Input voltage and adjusts automatically.
(Note: With 115 V AC input voltage, the maximum current is 150 A)

TETRIX 351 INVERTER, control range 5 – 350 A / 400 V **1.2.0117**
Mobile inverter power source for TIG manual or orbital welding with integrated cooling unit and gas level monitor. Can be used in conjunction with all Orbitec controllers, particularly with higher welding current and ED demands during tube-in-tubesheet applications.

Technical data:

Type of current	DC
Mains voltage	3 x 400 V (-25% – +20%)
Mains frequency	50 / 60 Hz
Max. primary reserve power	15 kVA
Rec. generator output	20.3 kVA
Control range	5 A – 350 A
Welding current	
· 60% ED TIG	350 A
· 100% ED TIG	300 A
Cooling efficiency	1.500 W
Water column	35 m / 5 l / min.
Tank capacity	12 l
Weight	131 kg
Dimensions (L x W x H)	1.100 x 455 x 1.000 mm

Package includes:
· Inverter
· Cooling unit
· Primary cable
· 10 l coolant

Item number

COOL 55 WATER COOLING UNIT, 230 V

1.2.0155

Water cooling unit for use with the TETRIX 200 inverter and TIGTRONIC in conjunction with water-cooled welding tools.

Technical data:

Supply voltage	230 V AC
Cooling system	F / IP 23
Weight	19 kg
Dimensions (L x W x H)	665 x 298 x 247 mm
Cooling capacity	1.200 W (1 l/min.)
Max. tank capacity	approx. 4,5 l
Water column	35 m / 5 l / min.

Package includes:

- Water cooling unit
- Inverter / cooling unit connection cable
- 4,5 l coolant

EVO COOL WATER COOLING UNIT (AUTORANGE)

1.3.8000

Water cooling unit for use with the EVO 200 WP or LITE controller in conjunction with water-cooled welding tools.

Technical data:

Supply voltage	110 – 240 V (1.4 – 0.6A)
Cooling system	F / IP 23
Weight (without coolant)	10.5 kg
Dimensions (L x W x H)	500 x 340 x 190 mm
Cooling efficiency	1.000 W (1 l/min)
Max. tank capacity	approx. 4 l
Max. flow rate	4 l/min
Max. outlet pressure	3.5 bar
Mains frequency	50 / 60 Hz

EVO Cool mounted on EVO 200 WP

- Standalone or continuous operation possible
- Temperature-regulated fan control
- Water flow feedback through in-built flowmeter

Package includes:

- Water cooling unit
- Inverter / cooling unit (permanently mounted) connection cable
- Fasteners for EVO series
- 4 l blueCool 10i-5 coolant

blueCool 10i-5 COOLANT

1.1.2501

Frost protection down to -10 °C (PU = 5 l canister)

ACCESSORIES

PRESSURE REGULATORS, GAS HOSE, GROUND CABLES

The cylinder pressure regulator with manual connection reduces the cylinder pressure of compressed gases and gases dissolved under pressure of max. 200 bar (300 bar on request) to a pressure corresponding to the flowmeter. The desired flow rate in l/min can be constantly set on the flowmeter.

Important: This pressure regulator has a constant working pressure of 2.5 bar to protect the orbital system's gas flow sensor.

Control range:
Twin flow 1 – 15 l/min, 3 – 25 l/min
Triple flow 1 – 15 l/min, 3 – 25 l/min, 5 – 50 l/min

	Item number
SPECIAL ARGON PRESSURE REGULATOR with twin flowmeter, brass	
200 BAR	**1.2.0123**
H2-GASES, 200 BAR	**1.2.0144**
300 BAR	**1.2.012303**
SPECIAL ARGON PRESSURE REGULATOR with triple flowmeter, brass	
200 BAR	**1.2.0134**
300 BAR	**1.3.0134**

FOR RBK APPLICATIONS: **1.2.0153**
SPECIAL ARGON PRESSURE REGULATOR with single flow meter 15l/min, brass, 200 bar, with pneumatic connection option RBK 60 S (intermediate pressure 0-6.5 bar)

200 / 10 BAR ARGON PRESSURE REGULATOR **1.2.0150**
(for RBK 60 S pneumatic connection)

0.5 – 10 BAR COMPRESSED AIR PRESSURE REGULATOR **1.2.0151**
incl. mounting bracket and inlet and outlet coupling
(for RBK 60 S pneumatic connection)

Pressure regulators with different connections and for other gas types or nickel-plated version available on request.

GAS HOSE, 3 m **1.3.0121**

GROUND CABLE, 5 m, 35 mm², up to 300 A **1.3.0125**

GROUND CABLE, 5 m, 50 mm², up to 500 A **1.3.0146**

ORBITAL WELDING TOOLS

Smart, flexible and totally precise

Due to their design, enclosed weld heads offer complete top layer protection of the weld joint due to continuous weld joint fluting during the welding process with protective gas. This reduces the joints' tempering colours.

A corresponding set of collets is also required for each tube outer diameter due to the design.

The wire cannot be fed cold.

The welds are made in the I-joint with precise joint preparation (90° – saw cut, face if necessary).

Advantage: Enclosed weld heads are comparably narrow and particularly suited to environments where space is tight.

OSK 13 S MICROFIT WELD HEAD incl. handle and cable assembly, 6 m
Gas-cooled weld head for applications with extremely narrow space requirements, e.g. in the semiconductor industry. Specially designed to weld micro-fittings too. The design (specific gas flow management) and the material selection enable high thermal capacity, even without water cooling.

- Extremely narrow / compact design.
- The head assembly is arranged in a way that makes it very easy to maintain.
- 6 m handle and cable assembly with practical handle (start/stop button and status display).
- Weld head compatible with 9-500 clamping cassettes from Arc Machines

Weld head:	Tube size range mm	Inch	Weight	
OSK 13 S	OD 3.17 – 12.7 mm	0.125" – 0.500"	2.4 kg	1.3.4000

Dimensions table for OSK 13 S enclosed weld heads

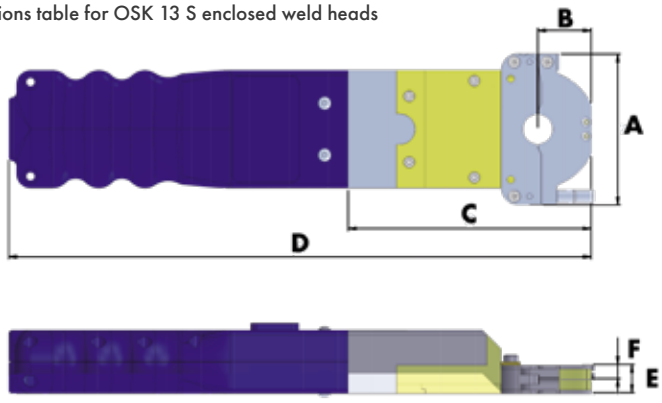

Weld head	A		B		C		D		E		F	
	mm	inch	mm	inch	mm	inch	mm	inch	mm	inch	mm	inch
OSK 13 S	64	2.520	24.4	0.960	105	4.133	279.2	10.992	12	0.472	6	0.236

OSK 13 S MICROFIT CLAMPING CASSETTE 1.3.4001+Ø
For welding where space is extremely tight

- Orbitec TCA clamping cassette, structural width 12 mm (0.472 inch)
- Clamping cassettes compatible with model 9-500 from Arc Machines
- Cassette can be mounted in both directions

		Item number
	OSK 13 S CLAMPING BLOCK FOR MICRO FITTING OSK 13 S clamping blocks for tube-tube connections with the matching collets and for tube-fitting connections.	
	OSK 13 S CONVERSION KIT Required for the use using clamping blocks	**1.3.4004**
	OSK 13 S CLAMPING BLOCKS FOR TUBE-TUBE CONNECTIONS incl. setting gauge for tube	**1.3.4005**
	COLLETS FOR OSK 13 S CLAMPING BLOCK (1 set = 4 collets) incl. setting gauge for tungsten	**1.3.4006+Ø**
	FITTING MOUNTING KIT FOR CLAMPING BLOCK OSK 13 S Tube to tube clamping block needed	**1.3.4008+Ø**

Item number

OSK CS GAS-COOLED WELD HEADS

Our new generation of two gas-cooled, compact weld heads that have been technically optimised and redesigned, for smaller nominal widths and featuring clamping levers. The heads were also designed for particularly tight space conditions with a narrow handle.

Weld head:	Tube size range mm	inch	Weight	
OSK 21 CS	OD 3.17 – 21.3 mm	0.125" – 0.839"	0.8 kg	**1.0.2820**
OSK 38 CS	OD 3.17 – 38.1 mm	0.125" – 1.500"	1.3 kg	**1.0.2920**

OSK C HANDLE AND CABLE ASSEMBLY, 8 m **1.3.2003**

Handle and cable assembly for OSK C and CS, consisting of a handle with control element (start/stop button and status display), weld head interface, motor / gearbox unit and 8 m hose package.

Optional:

OSK G OR S ADAPTER FLANGE ON C OR CS **1.3.2011**

Advantage: While using this flange, you can also use the OSK C and CS weld heads with the OSK G or S handle and cable assembly.

OSK CW WATER-COOLED WELD HEADS

Our new generation of compact weld heads for high thermal capacities with a water-cooled collet housing and clamping levers.

Weld head:	Tube size range mm	inch	Weight	
OSK 21 CW	OD 3.17 – 21.3 mm	0.125" – 0.839"	1.0 kg	**1.0.2820W**
OSK 38 CW	OD 3.17 – 38.1 mm	0.125" – 1.500"	1.4 kg	**1.0.2920W**

Both CW heads are operated using one handle and cable assembly.

OSK CW HANDLE AND CABLE ASSEMBLY, 8 m **1.3.2059**

Consisting of a handle with control element (start/stop button and status display), weld head interface, motor / gearbox unit and 8 m hose package.

Dimensions table for OSK CS and CW enclosed orbital weld heads

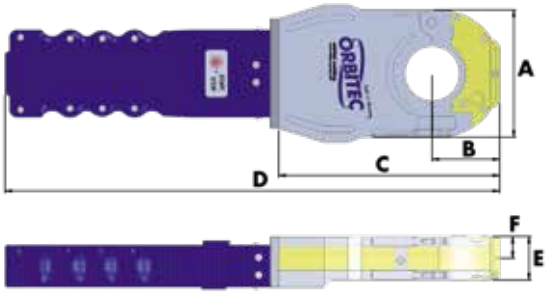

Weld head	A		B		C		D		E		F	
	mm	inch	mm	inch	mm	inch	mm	inch	mm	inch	mm	inch
OSK 21 CS	70	2.756	40	1.575	150	5.906	370	14.567	35	1.377	17.5	0.689
OSK 38 CS	102	4.016	54	2.156	177	6.969	396	15.591	35	1.377	17.5	0.689
OSK 21 CW	70	2.756	39.5	1.555	146	5.748	365.5	14.390	35	1.378	17.5	0.689
OSK 38 CW	102	4.016	54	2.156	177	6.969	396	15.591	35	1.378	17.5	0.689

Item number

OPTIONAL

OSK CS / CW WELD HEAD WITH EYEBOLTS AND CLAMPING SCREWS

The following OSK 21 or 38 welding heads are optionally available with eyebolts and spring-loaded clamping screws instead of clamping levers.

OSK CS GAS-COOLED WELD HEAD

Weld head:	Tube size range mm	inch	Weight	Item number
OSK 21 CS with eye & clamping screw	OD 3.17 - 21.3 mm	0.125" - 0.839"	0.8 kg	**1.0.282002**
OSK 38 CS with eye & clamping screw	OD 3.17 - 38.1 mm	0.125" - 1.500"	1.3 kg	**1.0.292002**

OSK CS WATER-COOLED WELD HEAD

Weld head:	Tube size range mm	inch	Weight	Item number
OSK 21 CW with eye & clamping screw	OD 3.17 - 21.3 mm	0.125" - 0.839"	1.0 kg	**1.0.2820W01**

For welding without prior manual tacking:

OSK 21 CB GAS-COOLED WELD HEAD WITH CLAMPING BLOCK FOR TUBE-TO-TUBE CONNECTIONS incl. setting gauge for pipe

Weld head:	Tube size range mm	inch	Weight	Item number
OSK 21 CB with eye & clamping screw	OD 3.17 - 21.3 mm	0.125" - 0.839"	1.0 kg	**1.0.28202**

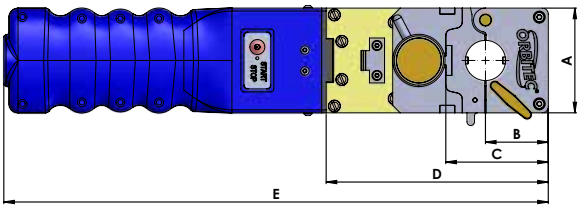

Weld head	A		B		C		D		E		F		G		H	
	mm	inch	mm	inch	mm	inch	mm	inch	mm	inch	mm	inch	mm	inch	mm	inch
OSK 21 S with clampig block	70	2.756	42	1.654	68.5	2.697	148.5	5.846	364	14.331	50.98	2.007	35	1.378	17.5	0.689

OSK 21/38 TUBE ALIGNMENT FIXTURE

OD 6.35 - 25.40 mm | 0.250" - 1.000")

1.2.0154

Tube alignment fixture with OSK 38 CS

ENCLOSED WELD HEADS

OSK S/SW/GW, HANDLE AND CABLE ASSEMBLIES

Item number

OSK S GAS-COOLED WELD HEADS
Our new generation of THREE gas-cooled weld heads that have been technically optimised and redesigned and have a tube size range of OD 6 – 114.3 mm / 0.250" – 4.500".

Special design features and the material selection enable high thermal capacity, even without water cooling.

The heads are even narrower and have a quick clamp system for the collets.

Weld head:	Tube size range mm	inch	Weight	
OSK 53 S	OD 6 – 53 mm	0.250"– 2.087"	2.1 kg	**1.0.2520**
OSK 76 S	OD 6 – 76.2 mm	0.250" – 3.000"	2.6 kg	**1.0.2620**
OSK 115 S	OD 9.53 – 114.3 mm	0.375" – 4.500"	3.4 kg	**1.1.2720**

OSK S HANDLE AND CABLE ASSEMBLY, 8 m **1.3.2057**
Handle and cable assemblies consisting of a handle with control element (start/stop button and status display), weld head interface, motor / gearbox unit and 8 m hose package.

The OSK G and S handle and cable assemblies and weld heads are compatible with one another!

OSK SW WATER-COOLED WELD HEADS
Our new generation of three OSK SW weld heads – even narrower, technically optimised and redesigned. For very high thermal capacities, we also offer the gas-cooled S series weld heads in a water-cooled SW version (the structural width stays the same). The closed water cooling system covers the bottom collet housing area.

Weld head:	Tube size range mm	inch	Weight	
OSK 53 SW	OD 6 – 53 mm	0.250" – 2.087"	2.1 kg	**1.0.2520W**
OSK 76 SW	OD 6 – 76.2 mm	0.250" – 3.000"	2.6 kg	**1.0.2620W**
OSK 115 SW	OD 9.53 – 114.3 mm	0.375" – 4.500"	3.4 kg	**1.1.2720W**

OSK 170 GW WATER-COOLED WELD HEAD **1.3.2899**

OSK 170 GW	OD 50 – 168.3 mm	1.969" – 6.626"	7.5 kg

OSK SW HANDLE AND CABLE ASSEMBLY, 8 m **1.3.2058**
Handle and cable assemblies consisting of a handle with control element (start/stop button and status display), weld head interface, motor / gearbox unit and 8 m hose package.

The OSK GW and SW handle and cable assemblies and weld heads are compatible with one another!

Dimensions table for OSK SW and GW enclosed orbital weld heads

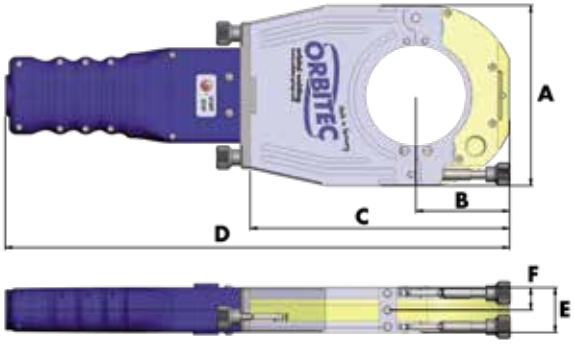

Weld head	A		B		C		D		E		F	
	mm	inch	mm	inch	mm	inch	mm	inch	mm	inch	mm	inch
OSK 53 S / SW	130	5.118	70	2.756	205	8.071	425	16.732	40	1.575	20	0.787
OSK 76 S / SW	160	6.299	83	3.268	230	9.055	450	17.717	40	1.575	20	0.787
OSK 115 S / SW	200	7.874	103	4.055	270	10.630	487.5	19.192	40	1.575	20	0.787
OSK 170 GW	270	10.630	132	5.197	343	13.504	563	22.165	44	1.732	22	0.866

Item number

OSK COLLETS
Maximum availability
We have a comprehensive range of collets in stock for all OSK heads.
1 set per tube outer diameter = 4 half-shells.

COLLETS FOR OSK 21	**1.3.2321+Ø**
COLLETS FOR OSK 38	**1.3.2021+Ø**
COLLETS FOR OSK 53	**1.3.2521+Ø**
COLLETS FOR OSK 76	**1.3.2621+Ø**
COLLETS FOR OSK 115	**1.3.2721+Ø**
COLLETS FOR OSK 170 HP	**1.3.2898+Ø**
ADAPTER COLLETS OSK 170 ON OSK 115	**1.1.28980**

All collet Ø in stock can be found in the table on page 71.
Other Ø and collets with a common contact surface are available as custom designs on request.

HP collets (OSK 53/76/115) for optimising the tempering colours in clean rooms available on request.

OFFSET ELECTRODE HOLDERS
The weld head size's maximum tube size range is then reduced.

OFFSET ELECTRODE HOLDER OSK 38 for electrode Ø 1.6 mm | 0.063" **1.3.3110**

OFFSET ELECTRODE HOLDER from OSK 53 for electrode Ø 1.6 mm | 0.063" **1.3.3106**
OFFSET ELECTRODE HOLDER from OSK 53 for electrode Ø 2.4 mm | 0.094" **1.3.3101**

MULTI-POSITION ELECTRODE HOLDER
The weld head size's maximum tube size range is then reduced.

MULTI-POSITION ELECTRODE HOLDER from OSK 53 for electrode Ø 1.6 mm | 0.063" **1.3.3102**
MULTI-POSITION ELECTRODE HOLDER from OSK 53 for electrode Ø 2.4 mm | 0.094" **1.3.3107**

GAS-SHIELD COLLETS
GAS-shield collets are particularly narrow and have an aluminium base collet and a screw-on gas-shield collet made of heat-resistant GRP material. They are used to weld fittings, flanges and components with short welded hexagon nipples. In conjunction with offset or multi-position electrode holders, the weld can be completed very close to one side of the weld head. A collet set with a common contact surface is recommended for secure fixing. GAS-SHIELD collets are available for OSK 53 / 76 / 115 weld heads (the max. tube size range is limited).

GAS-SHIELD base collets and gas shields (1 set = 2 half-shells)

GAS-SHIELD BASE COLLET FOR OSK 53	**1.2.3305**
GAS-SHIELD BASE COLLET FOR OSK 76	**1.2.3304**
GAS-SHIELD BASE COLLET FOR OSK 115	**1.2.3303**

Gas-shield COLLET (GRP)	for OSK 53	**1.2.3308**
(adaptation by the customer)	for OSK 76	**1.2.3307**
	for OSK 115	**1.2.3306**

Gas-shield COLLET (GRP)	for OSK 53	**1.2.3309**
(prefabricated with through-hole)	for OSK 76	**1.2.3310**
	for OSK 115	**1.2.3311**

3D-OSK collets for short pipe bends, special fittings etc. on request

OPEN WELD HEADS

OSW

Open weld heads are clamped on one side of the weld joint. During welding, the gas- or water-cooled torch with hose package rotates around the tube.

Advantages of open weld heads:
- Robust design
- Extremely easy to use
- Option of using additional wire
- Stepless tube size range
- Torch bracket has 90° tilting function

OSW WELD HEADS
Five weld heads for the OD 8 – 273 mm tube size range

Weld head:	Tube size range mm	inch	Weight	Item number
OSW 40	OD 12,7 – 40 mm	0.500" – 1.575"	2 kg	**1.3.1001**
OSW 80	OD 10 – 76.2 mm	0.394" – 3.000"	3 kg	**1.3.1101**
OSW 115	OD 20 – 114.3 mm	0.787" – 4.500"	4.5 kg	**1.3.1201**
OSW 170	OD 40 – 168.3 mm	1.575" – 6.626"	6.5 kg	**1.3.1301**
OSW 275	OD 88.9 – 273 mm	3.500" – 10.748"	19 kg	**1.3.1401**

In the case of the OSW 275, the rotor can be decoupled and the tongs can be rotated manually.

Package includes:
- Weld head
- Integrated start/stop button on the handle
- Top jaw
- OSW torch bracket (with roll scanning in the case of OSW 275)
- Mechanical headway control

Optional:

OSW 40 WITH ANGULAR GEARBOX	**1.0.1001**
OSW 80 WITH ANGULAR GEARBOX	**1.0.1101**
OSW 115 WITH ANGULAR GEARBOX	**1.0.1201**
OSW 170 WITH ANGULAR GEARBOX	**1.0.1301**

Dimensions table for OSW open orbital weld heads

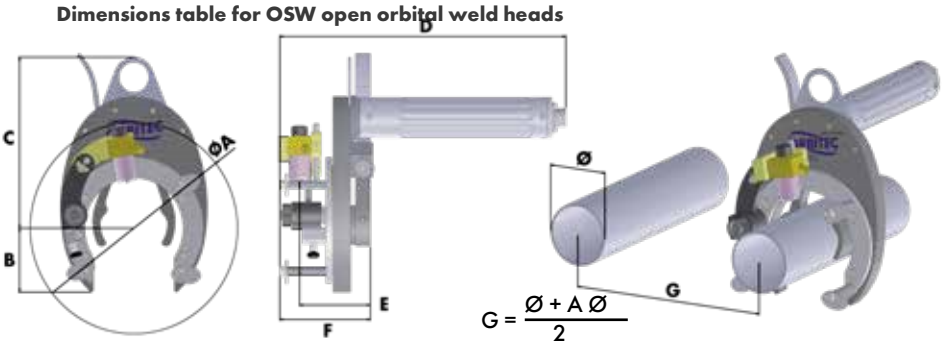

Weld head	Ø A		B		C		D		E		F	
	mm	inch	mm	inch	mm	inch	mm	inch	mm	inch	mm	inch
OSW 40	120	4.724	40	1.575	145	5.709	310	12.205	81	3.189	91	3.583
OSW 80	210	8.268	64	2.520	171	6.732	290	11.417	69	2.717	91	3.583
OSW 115	243	9.567	90	3.543	210	8.268	290	11.417	69	2.717	91	3.583
OSW 170	310	12.205	134	5.276	266	10.472	290	11.417	69	2.717	91	3.583
OSW 275	465	18.307	180	7.086	410	16.141	310	12.204	105	4.133	125	4.921

	Item number
BJ INTERCONNECTION CABLE WITH WIRE OUTLET, 8 m	**1.3.1629**
TIG TORCH WITH HOSE PACKAGE, GAS- OR WATER-COOLED FOR OSW	
'MINI' TIG TORCH with hose package, 8.5 m, gas-cooled, equipped with torch consumables and tungsten electrode Ø 1.6 mm	**1.3.1602**
'MINI' TIG TORCH with hose package, 6 m, water-cooled, equipped with torch consumables and tungsten electrode Ø 2.4 mm	**1.3.1625C**
'STANDARD' TIG TORCH with BJ hose package, 8.5 m, gas-cooled, equipped with torch consumables and tungsten electrode Ø 2.4 mm	**1.3.1631**
'STANDARD' TIG TORCH with BJ hose package, 8.5 m, water-cooled, equipped with torch consumables and tungsten electrode Ø 2.4 mm	**1.3.1634**
SPARE 2.5 m silicone hose package, gas-cooled, for OSW 40 (Special tooling required)	**1.1.1615**
SPARE 2.5 m silicone hose package, gas-cooled, for OSW 80 – 275	**1.3.1615**
EXTENSION HOSE PACKAGES FOR OSK / OSW TURN AND RBK	
EXTENSION HOSE PACKAGE, 8 m, gas-cooled	**1.3.2005**
EXTENSION HOSE PACKAGE, 8 m, combined gas- and water-cooled	**1.3.2006**

		Item number
	TIG TORCH BRACKET (isolator)	
	'MINI' TORCH BRACKET FOR OSW 40	**1.3.1617**
	'MINI' TORCH BRACKET, CAN BE SCREWED IN 45°, FOR OSW 40	**1.3.1609**
	MULTI-POSITION TORCH BRACKET FOR OSW 80 – 170	**1.3.1635**
	TORCH BRACKET WITH ROLL SCANNING FOR OSW 80 – 275	**1.3.1640**
	HIGH-FLEX MANUAL TIG HOSE PACKAGE, SR 9.8 m, gas-cooled · High-flex hose package · Torch consumables as for OSW · 5-pin Tuchel plug Water-cooled version available on request.	**1.3.1909**

ADAPTATION TO COMPETITOR PRODUCTS

ARC MACHINES, POLYSOUDE, ORBITALUM, SWAGELOK / CAJON, ...

Most of our welding tools can be adapted to competitor products from the likes of Arc Machines, Polysoude, Orbitalum or Swagelok / Cajon. To some extent, other providers' weld heads can also be connected to Orbitec welding systems using adaptations. The relevant adaptations are available for purchase and for rental.

COMPETITOR PRODUCT ADAPTATION FOR ORBITEC WELD HEADS

	Item number
OSK C HANDLE AND CABLE ASSEMBLY, AMI version, 8 m	**1.3.5311**
OSK CW HANDLE AND CABLE ASSEMBLY, AMI version, 8 m	**1.3.5315**
OSK S HANDLE AND CABLE ASSEMBLY, AMI version, 8 m	**1.3.5313**
OSK SW HANDLE AND CABLE ASSEMBLY, AMI version, 8 m	**1.3.5314**
OSK C HANDLE AND CABLE ASSEMBLY, Orbitalum version incl. remote control	**1.3.5318**
OSK CW HANDLE AND CABLE ASSEMBLY, Orbitalum version incl. remote control	**1.3.5319**
OSK S HANDLE AND CABLE ASSEMBLY, Orbitalum version incl. remote control	**1.3.5305**
OSK SW HANDLE AND CABLE ASSEMBLY, Orbitalum version incl. remote control	**1.3.5306**
POLYSOUDE ADAPTER FOR ORBITEC OSK WELD HEAD, gas-cooled	**1.3.5301**
POLYSOUDE ADAPTER FOR ORBITEC OSK WELD HEAD, water-cooled	**1.3.5302**
POLYSOUDE ADAPTER FOR ORBITEC OSW WELD HEAD, gas-cooled	**1.3.5303**
POLYSOUDE ADAPTER FOR ORBITEC OSW WELD HEAD, water-cooled	**1.3.5304**

ADAPTATION OF COMPETITOR WELD HEADS TO ORBITEC CONTROLLERS

ORBITEC ADAPTER FOR POLYSOUDE WELD HEAD	**1.3.5309**
ORBITEC EVO ADAPTER FOR AMI WELD HEAD, gas-cooled	**1.3.5316**
ORBITEC EVO ADAPTER FOR AMI WELD HEAD, gas- and water-cooled	**1.3.5317**
ORBITEC EVO ADAPTER FOR ORBITALUM WELD HEAD	**1.3.5320**
ORBITEC EVO ADAPTER FOR SWAGELOG / CAJON WELD HEAD	**1.3.5312**

Other adaptations available on request.

Made in Germany

ORBITEC®

orbital welding

www.orbitec-group.com

SPECIAL OFFER: ´OLD-FOR-NEW´ REPLACEMENT

When you return all brands of orbital welding equipment that is obsolete or that you not longer use, we'll give you the relevant ORBITEC product in exchange under special conditions.

Ask us!

Obsolete

No spare parts

Defective

Item number

TURN 230 S TURN TABLE 1.2.1858

Turn table, especially suitable for none orbital components with higher quantities
and can be connected to all Orbitec controllers.

Scope of application:

Tube size range:	OD 10 – 230 mm | 0.393 – 9.055"
Max. load in horizontal position:	50 kg

Technical data:

Chuck:	Three-jaw chuck with axis adjustment
Swivel range:	0 – 90° stepless
Power transmission:	max. 300 A
Weight:	88 kg
Dimensions (L x W x H):	1.020 x 360 x 750 mm

Package includes:

- Turn table
- Three-jaw chuck
- Interchangeable jaws
- Chuck key
- Robust articulated arm with central mechanical clamping
- Striking aid
- Ground cable
- Interconnection cable with wire and AVC outlet

Special versions available on request:

- Pneumatic torch adjustment
- Pneumatic centring and clamping
- Pneumatic tailstock
- Special diameters up to 1.000 mm
- Special lengths and complete workstation equipment available on request
- Special torch consumables

TURN TABLE

ACCESSORIES, UPGRADE KITS

	Item number
TURN 230 S MACHINE TORCH WITH 4 m hose package, gas-cooled, equipped with torch consumables and tungsten electrode Ø 2.4 mm ED: AC: 105 A, DC:150 A, 60% (10 min.)	**1.2.1814**
TURN 230 S MACHINE TORCH WITH 4 m hose package, water-cooled, equipped with torch consumables and tungsten electrode Ø 2.4 mm ED: AC: 160 A, DC: 220 A, 100% (10 min.)	**1.2.1815**
Special lengths and versions with a higher ED available on request.	
MANUAL ADJUSTMENT UNIT FOR TURN 230 S USING CROSS SUPPORT Slide width 50 mm, torch travel 50 mm, lateral adjustment 30 mm incl. torch clamp OD 20 mm incl. mounting flange (Special torch clamp OD 30 mm available on request)	**1.2.1861**
AVC UNIT ASSEMBLY FOR TURN 230 S incl. AVC motor with limit switching and 8 m connection cable, slide width 50 mm, torch travel 50 mm, lateral adjustment 30 mm incl. torch clamp OD 20 mm incl. mounting flange (Special torch clamp OD 30 mm available on request)	**1.2.1859**
WIRE CONSOLE FOR TURN 230 S incl. wire outlet nozzle and three nozzle tips for 0.8 / 1.0 / 1.2 mm	**1.2.1852**
COMFORT WIRE FEED CONSOLE FOR TURN 230 S (3D adjustable via linear unit)	**1.2.1869**
TUBE SUPPORT FOR TURN 230 S	**1.2.1860**

Item number

ORBIFEED WIRE FEED UNITS

Compact and lightweight wire feed units in a Peli case for 5 kg or 15 kg standard spools.

ORBIFEED 5 WIRE FEED UNIT, for 5 kg spools **1.3.1701**

ORBIFEED 15 WIRE FEED UNIT, for 15 kg spools **1.3.1702**

Technical data:	**ORBIFEED 5**	**ORBIFEED 15**
Motor voltage / power	24 V DC, 6 W	24 V DC, 6 W
Weight	approx. 7 kg	approx. 8 kg
Dimensions (L x W x H)	406 x 330 x 174 mm	525 x 436 x 217 mm
Wire spools	Standard spools 5 kg	Standard spools 5 & 15 kg
Wire diameter	0.8 / 1.0 mm	0.8 / 1.0 mm

Package includes:
- Water-resistant and dust-proof Peli case
- Four-roller drive mechanism
- Delivery hose with inlet and outlet nozzles
- Spool adapter
- Wire feed unit / controller connection cable

SPARE DELIVERY HOSE FOR ORBIFEED, COMPLETE, 4.5 m **1.3.1706**

SPARE WIRE FEED SPIRAL, RED, 4.5 m **1.3.1719**

SPARE TEFLON WIRE CORE FOR ORBIFEED, 4.7 m **1.3.1712**

SPARE WIRE INLET NOZZLE **1.3.1704**

SPARE WIRE OUTLET NOZZLE (WIRE Ø 0.8 mm) **1.3.1720**
SPARE WIRE OUTLET NOZZLE (WIRE Ø 1.0 mm) **1.3.1705**

WIRE FEED CONSOLES,
cpl., can be mounted on TIG OSW torch

OSW 40 WIRE FEED CONSOLE **1.3.1710**
'STANDARD' OSW 80 – 275 WIRE FEED CONSOLE **1.3.1708**
OSW 80 – 275 WIRE FEED CONSOLE, INTERNAL **1.3.1709**
OSW 80 – 275 WIRE FEED CONSOLE, COMFORT **1.3.1725**
(3D adjustable through linear guide units)

SPARE OSW 40 GRP WIRE HOLDER **1.0.1619**
SPARE OSW 80 – 275 GRP 'STANDARD' WIRE HOLDER **1.0.1630**
SPARE OSW 80 – 275 GRP WIRE HOLDER, INTERNAL **1.0.1638**

SPARE OSW 40 ALU WIRE HOLDER **1.0.1639**
SPARE OSW 80 – 275 ALU WIRE HOLDER **1.0.1634**

TUBE-TO-TUBESHEET WELD HEADS

RBK 38 S

Item number

With tube-to-tubesheet weld heads, it is possible to achieve consistently high-quality, reproducible welding of tubes to tubesheets, with or without additional wire. The tubes to be welded can be flush with the tubesheet, offset, protruding or behind the tubesheet.

The RBK 38 S and the RBK 60 S are our two new tube-to-tubesheet weld heads.

The RBK 38 S is a small, handy water-cooled head for welding tubes to tubesheets up to an ID of 36.7 mm, without additional wire.

RBK 38 S WELD HEAD incl. 8 m hose package — **1.3.3703**

Dimensions table for the RBK 38 S tube-to-tubesheet weld head

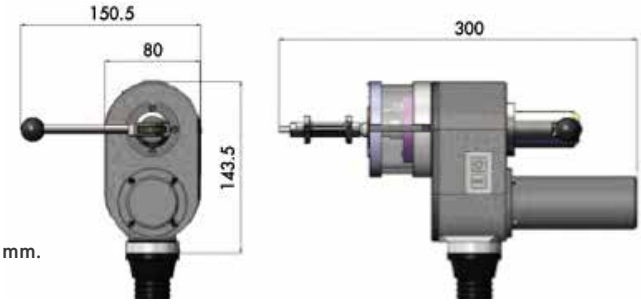

Dimensions in mm.

Technical data:	RBK 38 S
Tube size range mm | inch	ID 9.3 – 36.7 mm | 0.366" – 1.445" (optinal from ID 6.0 mm | 0.236")
Max. welding current	125 A
Rotation speed	Max. 5 rpm
Centring	mechanical
Weight	5 kg

Package includes:
- Weld head
- Water-cooled hose package, 6 m
- Pull bar B
- Gas hood ID 35 mm
- 0° electrode holder
- Transport case

0° ELECTRODE HOLDER FOR TUNGSTEN Ø 2.4 MM	**1.3.3004**
7° ELECTRODE HOLDER FOR TUNGSTEN Ø 2.4 MM	**1.3.3005**
MULTI-POSITION ELECTRODE HOLDER FOR AN ELECTRODE Ø OF 1.6 MM	**1.3.3703004**
MULTI-POSITION ELECTRODE HOLDER FOR AN ELECTRODE Ø OF 2.4 MM	**1.3.3703003**

GAS HOOD ID 28 MM FOR RBK 38 S	**1.3.3007**
GAS HOOD ID 35 MM FOR RBK 38 S	**1.3.3006**
GAS HOOD ID 48 MM FOR RBK 38 S	**1.3.3008**

TUBE-TO-TUBESHEET WELD HEADS

RBK 38 S, SPRING SLEEVES

Spring sleeve for RBK 38 S

PULL BAR SET A
Tube size range 9.3 mm – 16.2 mm
(0.366" – 0.638")
1.3.3002

PULL BAR SET B
Tube size range 16 mm – 36.7 mm
(0.630" – 1.445")
1.3.3003

Tube size range ID			Item number
mm	inch		
9.3 – 9.7	0.366 – 0.382	Gas hood DI 28 mm	**1.3.370493**
9.8 – 10.2	0.386 – 0.406		**1.3.370498**
10.7 – 11.1	0.421 – 0.437		**1.3.3704107**
11.3 – 11.7	0.445 – 0.461		**1.3.3704113**
11.8 – 12.2	0.465 – 0.480		**1.3.3704118**
12.8 – 13.2	0.504 – 0.520		**1.3.3704128**
13.8 – 14.2	0.543 – 0.559		**1.3.3704138**
14.0 – 14.4	0.551 – 0.567		**1.3.370414**
14.6 – 15.0	0.574 – 0.591		**1.3.3704146**
15.8 – 16.2	0.622 – 0.638		**1.3.3704158**
16.0 – 16.4	0.630 – 0.646		**1.3.370416**
16.4 – 16.8	0.646 – 0.661		**1.3.3704164**
16.8 – 17.2	0.661 – 0.677		**1.3.3704168**
17.2 – 17.6	0.677 – 0.693		**1.3.3704172**
17.8 – 18.2	0.701 – 0.717		**1.3.3704178**
18.4 – 18.8	0.724 – 0.740		**1.3.3704184**
18.8 – 19.2	0.740 – 0.756		**1.3.3704188**
19.4 – 19.8	0.764 – 0.780		**1.3.3704194**
19.8 – 20.2	0.780 – 0.795		**1.3.3704198**
20.4 – 20.8	0.803 – 0.819	Gas hood DI 35 mm	**1.3.3704204**
20.8 – 21.2	0.819 – 0.834		**1.3.3704208**
21.0 – 21.4	0.827 – 0.843		**1.3.370421**
21.3 – 21.7	0.839 – 0.854		**1.3.3704213**
21.8 – 22.2	0.858 – 0.874		**1.3.3704218**
22.3 – 22.7	0.877 – 0.894		**1.3.3704223**
22.8 – 23.2	0.897 – 0.913		**1.3.3704228**
23.2 – 23.6	0.913 – 0.929		**1.3.3704232**
23.4 – 23.8	0.921 – 0.937		**1.3.3704234**
23.6 – 24.0	0.929 – 0.945		**1.3.3704236**
23.8 – 24.2	0.937 – 0.952		**1.3.3704238**
24.3 – 24.7	0.957 – 0.974		**1.3.3704243**
25.4 – 25.8	1.000 – 1.016		**1.3.3704254**
25.8 – 26.2	1.016 – 1.031		**1.3.3704258**
26.4 – 26.8	1.039 – 1.055		**1.3.3704264**
26.8 – 27.2	1.055 – 1.071		**1.3.3704268**
27.4 – 27.8	1.079 – 1.094		**1.3.3704274**
28.4 – 28.8	1.118 – 1.134		**1.3.3704284**
28.8 – 29.2	1.134 – 1.150		**1.3.3704288**
29.4 – 29.8	1.157 – 1.173		**1.3.3704294**
29.8 – 30.2	1.173 – 1.189		**1.3.3704298**
30.4 – 30.8	1.197 – 1.213	Gas hood DI 48 mm	**1.3.3704304**
30.8 – 31.2	1.213 – 1.228		**1.3.3704308**
31.5 – 31.9	1.240 – 1.256		**1.3.3704315**
33.8 – 34.2	1.331 – 1.346		**1.3.3704338**
34.8 – 35.2	1.370 – 1.386		**1.3.3704348**
35.5 – 35.9	1.398 – 1.413		**1.3.3704355**
35.8 – 36.2	1.409 – 1.425		**1.3.3704358**
36.3 – 36.7	1.429 – 1.445		**1.3.3704368**

Item number

The RBK 60 S is an extremely robust water-cooled weld head for a standard heat exchanger application up to an ID of 60 mm, modified to an ID of 99 mm or 120 mm. The head is pneumatically centred and is available with a rotating wire device and/or arc voltage control (AVC) as an option. The head can also be used with a pneumatic positioner instead of a balancer.

RBK 60 S WELD HEAD with pneumatic centring incl. 8 m hose package, water-cooled	**1.3.3702**
RBK 60 S WELD HEAD with pneumatic centring and wire feed unit incl. hose package, 8 m, water-cooled	**1.3.3701**
RBK 60 S WELD HEAD with pneumatic centring, wire feed unit and AVC incl. hose package, 8 m, water-cooled	**1.3.3700**

With pneumatic centring

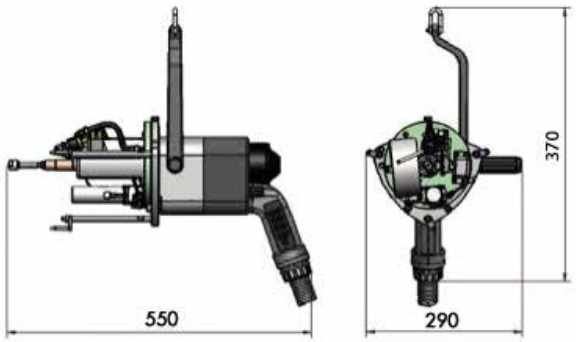

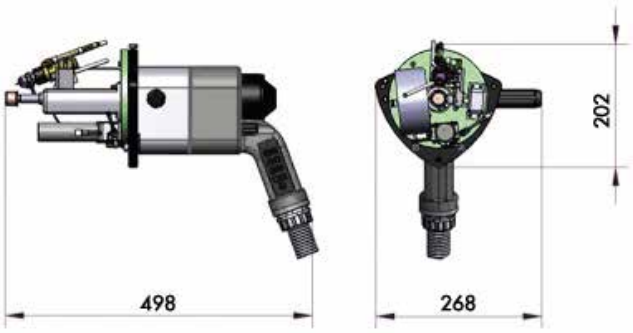

Dimensions in mm.

TUBE-TO-TUBESHEET WELD HEADS

RBK 60 S, SPRING SLEEVES

With a pneumatic positioner

Technical data:	**RBK 60 S**
Tube size range mm | inch	ID 9.5 – 60.5 mm | 0.374" – 2.381"
	(optional up to 99.10 mm | 3.901" or 120 mm | 4.724")
Max. welding current	200 A
Wire motor	24 V DC
Rotation speed	Max. 5 rpm
Wire spool	1 kg, D100
Wire diameter	0.8 – 1.2 mm
Weight without wire feed	8 kg
Weight with wire feed	10.5 kg
Weight with wire feed / AVC	11 kg
Centring	pneumatic

Package includes:

- Weld head
- Small torch incl. torch consumables and tungsten electrode Ø 2.4 mm
- Water-cooled hose package, 8 m
- Pull bar B
- Transport case

Up to an ID of 30 mm, the spring sleeves are made of steel; in the case of larger diameters, the package also includes four stainless steel jaws.

Spring sleeve for RBK 60 S

Tube size range ID		Item number
mm	**inch**	
9.5 – 10.5	0.374 – 0.413	**1.3.370595**
10.5 – 11.5	0.413 – 0.453	**1.3.3705105**
11.5 – 12.5	0.453 – 0.492	**1.3.3705115**
12.5 – 13.5	0.492 – 0.531	**1.3.3705125**
13.5 – 14.5	0.531 – 0.571	**1.3.3705135**
14.5 – 15.5	0.571 – 0.610	**1.3.3705145**
15.5 – 16.5	0.610 – 0.650	**1.3.3705165**
16.1 – 17.1	0.634 – 0.673	**1.3.3705161**
17.2 – 18.2	0.677 – 0.717	**1.3.3705172**
18.5 – 19.5	0.728 – 0.768	**1.3.3705185**
19.5 – 20.5	0.768 – 0.807	**1.3.3705195**
20.5 – 21.5	0.807 – 0.846	**1.3.3705205**
21.7 – 22.7	0.854 – 0.894	**1.3.3705217**
22.4 – 23.4	0.882 – 0.921	**1.3.3705224**
22.7 – 23.7	0.894 – 0.933	**1.3.3705227**
23.5 – 24.5	0.925 – 0.965	**1.3.3705235**
24.5 – 25.5	0.965 – 1.004	**1.3.3705245**
25.5 – 26.5	1.004 – 1.043	**1.3.3705255**
26.5 – 27.5	1.043 – 1.083	**1.3.3705265**
27.5 – 28.5	1.083 – 1.122	**1.3.3705275**
28.5 – 29.5	1.122 – 1.161	**1.3.3705285**
29.5 – 30.5	1.161 – 1.201	**1.3.3705295**
30.5 – 31.5	1.201 – 1.240	**1.3.3705305**
31.5 – 32.5	1.240 – 1.280	**1.3.3705315**
32.5 – 33.5	1.280 – 1.319	**1.3.3705325**
33.5 – 34.5	1.319 – 1.358	**1.3.3705335**
34.5 – 35.5	1.358 – 1.398	**1.3.3705345**
35.5 – 36.5	1.398 – 1.437	**1.3.3705355**

TUBE-TO-TUBESHEET WELD HEADS

RBK 60 S SPRING SLEEVE, ACCESSORIES

Spring sleeve for RBK 60 S

PULL BAR SET A
Tube size range 9.5 mm – 19.5 mm
(0.374" – 0.768")
1.3.3065

PULL BAR SET B
Tube size range 19.5 mm – 99.1 mm
(0.768" – 3.902")
1.3.3069

			Item number
36.5 – 37.5	1.437 – 1.476		1.3.3705365
37.5 – 38.5	1.476 – 1.516		1.3.3705375
38.5 – 39.5	1.516 – 1.555		1.3.3705385
39.5 – 40.5	1.555 – 1.594		1.3.3705395
40.5 – 41.5	1.594 – 1.634		1.3.3705405
41.5 – 42.5	1.634 – 1.673		1.3.3705415
42.5 – 43.5	1.673 – 1.713		1.3.3705425
43.5 – 44.5	1.713 – 1.752		1.3.3705435
44.5 – 45.5	1.752 – 1.791		1.3.3705445
45.5 – 46.5	1.791 – 1.831		1.3.3705455
46.5 – 47.5	1.831 – 1.870		1.3.3705465
47.5 – 48.5	1.870 – 1.909		1.3.3705475
48.0 – 49.0	1.890 – 1.929		1.3.370548
49.5 – 50.5	1.949 – 1.988		1.3.3705495
50.5 – 51.5	1.988 – 2.028		1.3.3705505
51.5 – 52.5	2.028 – 2.067		1.3.3705515
52.5 – 53.5	2.067 – 2.106		1.3.3705525
53.5 – 54.5	2.106 – 2.146		1.3.3705535
54.5 – 55.5	2.156 – 2.185		1.3.3705545
55.5 – 56.5	2.185 – 2.224		1.3.3705555
56.5 – 57.5	2.224 – 2.264		1.3.3705565
57.5 – 58.5	2.264 – 2.303		1.3.3705575
58.5 – 59.5	2.303 – 2.343		1.3.3705585
59.5 – 60.5	2.343 – 2.382		1.3.3705595
60.6 – 61.6	2.386 – 2.425	With extension kit	1.3.3705606
61.5 – 62.5	2.421 – 2.461		1.3.3705615
62.5 – 63.5	2.461 – 2.500		1.3.3705625
63.5 – 64.5	2.500 – 2.539		1.3.3705635
64.5 – 65.5	2.539 – 2.579		1.3.3705645
65.5 – 66.5	2.579 – 2.618		1.3.3705655
66.5 – 67.5	2.618 – 2.657		1.3.3705665
67.5 – 68.5	2.657 – 2.697		1.3.3705675
68.5 – 69.5	2.697 – 2.736		1.3.3705685
69.5 – 70.5	2.736 – 2.776		1.3.3705695
70.5 – 71.5	2.776 – 2.815		1.3.3705705
71.5 – 72.5	2.815 – 2.854		1.3.3705715
72.7 – 73.7	2.862 – 2.902		1.3.3705725
73.5 – 74.5	2.894 – 2.933		1.3.3705735
74.5 – 75.5	2.933 – 2.972		1.3.3705745
75.5 – 76.5	2.972 – 3.002		1.3.3705755
76.5 – 77.5	3.012 – 3.051		1.3.3705765
77.5 – 78.5	3.051 – 3.091		1.3.3705775
78.5 – 79.5	3.091 – 3.130		1.3.3705785
79.5 – 80.5	3.130 – 3.169		1.3.3705795
80.5 – 81.5	3.169 – 3.209		1.3.3705805

81.5 – 82.5	3.209 – 3.248	**1.3.3705815**
82.0 – 83.0	3.228 – 3.268	**1.3.370582**
82.5 – 83.5	3.248 – 3.287	**1.3.3705825**
84.5 – 85.5	3.327 – 3.366	**1.3.3705845**
98.1 – 99.1	3.862 – 3.902	**1.3.3705981**

LARGE TORCH FOR RBK 60 S FOR 3.2 MM ELECTRODES — **1.3.3708**

EXTENSION KIT FOR RBK 60 S FOR AN ID GREATER THAN 60 MM — **1.3.3707**

TITANIUM DISTRIBUTION NOZZLE SET FOR RBK 60 S — **1.3.3052**
(can only be mounted for large torch)

BALANCER (4,5 – 9 KG) — **1.2.3617**
BALANCER (9 – 15 KG) — **1.2.3614**
BALANCER (15 – 22 KG) — **1.1.3615**

WORKSTATION ACCESSORIES

MOBILE WORKSTATION

MOBILE WORKSTATION

Item number

Your business card: The mobile orbital workstation

MOBILE ORBITAL WORKSTATION — **1.2.0128**

- Electrical supply integrated for auxiliary equipment: 5 x 230 V, 10 A (not suitable for the power source!)
- 2 swivel castors, Ø 160 mm, with full lock
- 2 trestle castors, Ø 280 mm
- Pull-out cylinder bracket with fixing chain above the cylinder's centre of gravity
- High-quality powder-coated finish
- Sturdy stainless steel work top, tilted
- Platform for oxygen analyser
- Fixing for bench vice with 'V' block
- Holder for open weld head
- Holder for manual hose package
- Storage space for inverter, cooling unit, etc.

Dimensions (excluding mounted brackets):

(L x W x H): 1,110 x 710 x 850 mm
Weight: unloaded approx. 70 kg

MOBILE ORBITAL WORKSTATION WITHOUT CYLINDER RACK — **1.2.0146**

HOLDERS FOR MOBILE WORKSTATIONS

OSK C, CS AND CW HOLDER FOR MOBILE WORKSTATIONS — **1.0.5504**
OSK S, SW AND G HOLDER FOR MOBILE WORKSTATIONS — **1.0.5503**

HOLDER FOR WORK BENCH

OSK 13 S HOLDER FOR WORK BENCH — **1.3.4002**
OSK C, CS AND CW HOLDER FOR WORK BENCH — **1.0.5502**
OSK S, SW AND G HOLDER FOR WORK BENCH — **1.0.5501**

WORKSTATION ACCESSORIES

ACCESSORIES

	Item number
BENCH VICE, NICKEL-PLATED Parallel bench vice, size 100, suitable for use in clean rooms	1.2.0132
'V' BLOCKS For securing tubes when tacking before welding · Surface-treated aluminium	
'V' BLOCKS FOR MINI FITTINGS	
'V' BLOCK for mini fittings OD 6 – 6.35 mm | 0.236" – 0.250"	1.2.0141
'V' BLOCK for mini fittings OD 8 – 10 mm | 0.315" – 0.394"	1.2.0142
'V' BLOCK for mini fittings OD 12 – 13.5 mm | 0.472" – 0.531"	1.2.0143
V' BLOCKS FOR LARGER TUBE Ø	
V' BLOCK OD 5 – 30 mm | 0.197" – 1.181"	1.2.0129
V' BLOCK OD 10 – 65 mm | 0.394" – 2.559"	1.2.0130
'V' BLOCK OD 20 – 115 mm | 0.787" – 4.528"	1.2.0131
SMALL TOOL KIT Package includes: · NINE-piece Allen key set · Feeler gauge, 21 blade · Tweezers · Slotted screwdriver · Case	1.2.0133
OSK 13 S SMALL TOOL KIT Package includes: · SIX-piece Allen key set · Feeler gauge, 13 blade · Tweezers · Various screwdrivers · Case	1.3.0133
TELESCOPE MIRROR SET (24 MM, 30 MM, 40 MM) incl. inspection lamp and case	1.1.4132

TUNGSTEN ELECTRODES

TABLE OF LENGTHS

SuperArc: Precision-machined disposable tungsten electrodes for reproducible orbital welding. **Cut your costs, because each new manual sharpening operation costs time and money.** Standard quality WC 20 to DIN EN ISO 6848.

Finished dimensions for all ORBITEC weld heads as a function of the tube outer diameter.

Ø	Length	Ø Tip surface	Polished section
1.0 mm	All lengths available	0.1 mm	30°
1.6 mm	All lengths available	0.2 mm	18°
2.4 mm	All lengths available	0.4 mm	30°

	Item number
SuperArc tungsten electrode Ø 1.0 mm	**1.2.0202** + length
SuperArc tungsten electrode Ø 1.6 mm	**1.2.0200** + length
SuperArc tungsten electrode Ø 2.4 mm	**1.2.0201** + length

Weld head		OSK 13 S*		OSK 21 CS/CW		OSK 38 CS/CW		OSK 53 S/SW		OSK 53 G/GW		OSK 76 S/SW		OSK 115 S/SW		OSK 170 GW	
Tube Ø		Electrode length															
mm	inch	mm	inch	mm	inch	mm	inch	mm	inch	mm	inch	mm	inch	mm	inch	mm	inch
3.17	**0.125**	14	0.551	26	1.024	40	1.575										
6.00	**0.236**	12	0.472	25	0.984	39	1.535	48	1.889	54	2.126	64	2.520				
6.35	**0.250**	12	0.472	25	0.984	39	1.535	47	1.850	53	2.087	63	2.480				
8.00	**0.315**	11	0.433	24	0.945	38	1.496	47	1.850	53	2.087	63	2.480				
9.53	**0.375**	10	0.394	23	0.906	37	1.457	46	1.811	52	2.047	62	2.441	82	3.228		
10.00	**0.394**	10	0.394	23	0.906	37	1.457	46	1.811	52	2.047	62	2.441	82	3.228		
10.20	**0.402**	10	0.394	22	0.866	36	1.417	46	1.811	51	2.008	61	2.402	81	3.189		
12.00	**0.472**	9	0.354	22	0.866	36	1.417	45	1.771	51	2.008	61	2.402	81	3.189		
12.70	**0.500**	9	0.354	21	0.827	35	1.378	44	1.732	50	1,969	60	2.362	80	3.150		
13.00	**0.512**			21	0.827	35	1.378	44	1.732	50	1,969	60	2.362	80	3.150		
13.50	**0.531**			21	0.827	35	1.378	44	1.732	50	1,969	60	2.362	80	3.150		
15.88	**0.625**			20	0.787	34	1.339	43	1.692	49	1.929	59	2.323	79	3.110		
16.00	**0.630**			20	0.787	34	1.339	43	1.692	49	1.929	59	2.323	79	3.110		
17.20	**0.677**			19	0.748	33	1.299	42	1.653	48	1.889	58	2.283	78	3.071		
18.00	**0.709**			18	0.709	32	1.260	41	1.614	47	1.850	57	2.244	77	3.031		
19.00	**0.748**			17	0.669	31	1.220	40	1.574	46	1.811	56	2.205	76	2.992		
19.05	**0.750**			17	0.669	31	1.220	40	1.574	46	1.811	56	2.205	76	2.992		
20.00	**0.787**			17	0.669	31	1.220	39	1.535	46	1.811	56	2.205	76	2.992		
21.30	**0.839**			16	0.630	30	1.181	39	1.535	45	1.771	55	2.165	75	2.953		
22.00	**0.866**					30	1.181	39	1.535	45	1.771	55	2.165	75	2.953		
23.00	**0.906**					29	1.142	38	1.496	44	1.732	54	2.126	74	2.913		
25.40	**1.000**					28	1.102	37	1.456	43	1.692	53	2.087	73	2.874		
26.90	**1.059**					27	1.063	36	1.417	42	1.653	52	2.047	72	2.835		
28.00	**1.102**					27	1.063	36	1.417	42	1.653	52	2.047	72	2.835		
29.00	**1.142**					26	1.024	35	1.377	41	1.614	51	2.008	71	2.795		
30.00	**1.181**					26	1.024	35	1.377	41	1.614	51	2.008	71	2.795		
33.70	**1.327**					24	0.945	33	1.299	39	1.535	49	1.929	69	2.717		
35.00	**1.378**					23	0.906	32	1.259	38	1.496	48	1.890	68	2.677		
38.10	**1.500**					21	0.827	31	1.220	36	1.417	46	1.811	66	2.598		
40.00	**1.575**							30	1.181	36	1.417	46	1.811	66	2.598		
41.00	**1.614**							29	1.141	35	1.378	45	1.772	65	2.559		
42.40	**1.669**							28	1.102	34	1.339	44	1.732	64	2.520		
44.50	**1.752**							27	1.062	33	1.299	43	1.693	63	2.480		
48.30	**1.902**							25	0.984	31	1.220	41	1.614	61	2.402		
50.80	**2.000**							24	0.944	30	1,181	40	1.575	60	2.362	90	3.543
51.00	**2.008**							24	0.944	30	1,181	40	1.575	60	2.362	90	3.543
52.00	**2.047**							24	0.944	30	1,181	40	1.575	60	2.362	90	3.543
53.00	**2.087**							23	0.905	29	1.142	39	1.535	59	2.323	89	3.504
54.00	**2.126**											39	1.535	59	2.323	89	3.504
60.30	**2.374**											35	1.378	55	2.165	85	3.346
63.50	**2.500**											34	1.339	54	2.126	84	3.307
70.00	**2.756**											31	1.220	51	2.008	81	3.189
76.10	**2.996**											27	1.063	47	1.850	78	3.071
76.20	**3.000**											27	1.063	47	1.850	78	3.071
85.00	**3.346**													43	1.693	74	2.913
88.90	**3.500**													41	1.614	71	2.795
101.60	**4.000**													35	1.378	65	2.559
104.00	**4.094**													34	1.339	64	2.520
108.00	**4.252**													32	1.260	64	2.520
114.30	**4.500**													28	1.102	58	2.283
127.00	**5.000**															53	2.087
129.00	**5.079**															52	2.047
141.30	**5.563**															46	2.811
152.40	**6.000**															40	1.575
154.00	**6.063**															39	1.535
168.28	**6.625**															32	1.260

Electrode lengths for:

OSW 40 open weld head:	20 – 35 mm	0.787" – 1.378"
OSW 80 – 275 open weld heads:	35 – 50 mm	1.378" – 1.968"
RBK tube-to-tubesheet weld heads:	35 – 46 mm	1.378" – 1.811"

* Only electrodes measuring 1.0 mm in diameter must be used for the OSK 13 S. Special lengths available on request.

TUNGSTEN GRINDER

S-TGS_C AND S-TGS_CL

Item number

Portable tungsten grinders for precise and swift machining of tungsten electrodes for TIG orbital and manual welding.

· Quick and easy to use
· High precision and thus reproducibility
· Longitudinal grinding
· A tip surface can be attached to the electrode

TUNGSTEN GRINDERS S-TGS_C AND S-TGS_CL
· Fixed grinding angle
· Sharpen without collet
· Separate the electrode
· Optionally battery-powered or 230 V device
· Grinding wheel can be used on both sides
· Very light and easy to handle

Technical data	S-TGS_C (230 V)	S-TGS_CL (battery)
Output:	170 W	
Mains connection:	220-240 V / 50-60 Hz	10,8 V / 1500 mA
Speed:	Variable from 8,000 to 35,000 rpm	Variable from 8,000 to 35,000 rpm
Grinding angel:	15°, 18°, 22,5° and 30°	15°, 18°, 22,5° and 30°
Electrode diameter:	1.0 mm, 1.6 mm, 2.0 mm, 2.4 mm, 3.2 mm	1.0 mm, 1.6 mm, 2.0 mm, 2.4 mm, 3.2 mm
Diamont grinding wheel:	Ø 38 mm	Ø 38 mm
Weight:	0.79 kg	0.48 kg
Item number	**1.1.0215**	**1.1.0219**

Package includes:
· Tungsten grinder
· Diamond grinding wheel
· T-key, 3 mm hexagon socket
· Transport case
· Charging cable (only for battery-powered device)

DIAMOND GRINDING WHEEL S-TGS MEDIUM GRIT — 1.1.0216
Can be used on both sides

TORCH CONSUMABLES

OSW, RBK, TURN

	Item number
TORCH CAPS	
OSW 40 TORCH CAP for water-cooled burner and glass gas nozzle on OSW	**1.0.1615S**
OSW TORCH CAP	**1.3.1147**
TURN TORCH CAP	**1.2.1817**
MANUAL TORCH CAP	**1.3.1910**
CLAMP SLEEVES	
OSW 40 CLAMP SLEEVE for torch, gas-cooled, Ø 1.6 mm, length 16 mm	**1.0.1616**
OSW 40 CLAMP SLEEVE for torch, gas-cooled, Ø 2.4 mm, length 16 mm	**1.0.1623**
OSW 40 CLAMP SLEEVE for torch, water-cooled, Ø 1.6 mm, length 17 mm	**1.0.1640**
OSW 40 CLAMP SLEEVE for torch, water-cooled, Ø 2.4 mm, length 17 mm	**1.0.1641**
OSW 80 – 275CLAMP SLEEVE, manual torch, Ø 1.6 mm	**1.0.1626**
OSW 80 – 275 CLAMP SLEEVE, manual torch Ø 2.4 mm	**1.0.1627**
CLAMP SLEEVE, TURN, Ø 1.6 mm	**1.2.1818**
CLAMP SLEEVE, TURN, Ø 2.4 mm	**1.2.1819**
CLAMP SLEEVE, RBK 60 S, Ø 2.4 mm	**1.3.3076**
CLAMP SLEEVE, RBK 60 S, Ø 3.2 mm	**1.3.3089**
TEFLON INSULATORS	
OSW 40 TEFLON INSULATOR	**1.0.1618**
OSW 80 – 275 TEFLON INSULATOR	**1.0.1629**
TEFLON INSULATOR for glass gas nozzle	**1.0.1051**
TURN TEFLON INSULATOR, manual torch	**1.2.1820**
RBK 60 S TEFLON INSULATOR	**1.3.3078**
GAS LENSES	
OSW 40 GAS LENS, Ø 1.6 mm	**1.0.1620**
OSW 40 GAS LENS, Ø 2.4 mm	**1.0.1624**
OSW 80 – 275 GAS LENS, TURN, manual torch, Ø 1.6 mm	**1.0.1631**
OSW 80 – 275 GAS LENS, TURN, manual torch, Ø 2.4 mm	**1.0.1632**
GAS LENS for glass gas nozzle OSW 80-275, TURN, Ø 2.4 mm	**1.3.1049**
RBK 60 S GAS LENS, Ø 2.4 mm	**1.3.3079**
RBK 60 S GAS LENS, Ø 3.2 mm	**1.3.3096**
GAS LENS HOLDER for glass gas nozzle	**1.0.1050**
CERAMIC NOZZLES	
CERAMIC NOZZLES OSW 40	**1.3.1046**
CERAMIC NOZZLES OSW 80 - 275, TURN, size 8	**1.3.1146**
CERAMIC NOZZLES RBK 60 S, size 7	**1.3.3077**
CERAMIC NOZZLES manuel torch,size 6	**1.3.1911**
GLASS GAS NOZZLES OSW 80-275, TURN	**1.3.1048**

TORCH CONSUMABLES

OSW, RBK, TURN

	Item number
IGNITION AIDS	
IGNITION AID, TURN, Ø 15 mm, length 150 mm	**1.2.1803**
RBK 60 S IGNITION AID, TURN, Ø 16 mm, length 180 mm	**1.3.3088**
RBK 60 S IGNITION AID, TURN, Ø 24 mm, length 160 mm	**1.3.3073**
OSW TORCH CONSUMABLES BOXES	
CONSUMABLES BOX with torch original equipment for OSW 40, Ø 1.6 mm	**1.3.1623**
CONSUMABLES BOX with torch original equipment for OSW 40, Ø 2.4 mm	**1.3.1624**
CONSUMABLES BOX with torch original equipment for OSW 80 – 275, Ø 1.6 mm	**1.3.1621**
CONSUMABLES BOX with torch original equipment for OSW 80 – 275, Ø 2.4 mm	**1.3.1622**
CONSUMABLES BOXES GLASS-GAS NOZZLE - 1 torch cap - 1 clamping sleeve - 1 Teflon insulator - 1 gas lens - 1 gas lens holder - 1 glass gas nozzle	**1.0.1052**
RBK 60 S TORCH CONSUMABLES BOXES	
CONSUMABLES BOX with torch original equipment, Ø 2.4 mm	**1.3.1641**
CONSUMABLES BOX with torch original equipment, Ø 3.2 mm	**1.3.1642**
PACKAGE INCLUDES: · 1 torch cap (for OSW only) · 1 clamp sleeve · 1 Teflon insulator · 1 gas lens · 1 ceramic nozzle	

JOINT PREPARATION

TUBE SAWS
A precise 90° saw cut is a basic requirement for orbital weld preparation..

TUBE SAWS S-LT
· Robust saws for all wall thicknesses
· Powerful drive motor
· Uniform and easy feed control by means of handwheel
· Different chamfering blades mountable
· Right-angled saw cut
· 4, 5 or 6 clamping jaws made of stainless steel as well as reducing jaws
· 4 insert collets (just for S-100 LT)
· Due to concentric clamping no deformation with thin-walled pipes
· Also for cutting off pipe bends
· Quick-release fastener for easy changing of saw blades
· Chip removal during cutting by means of integrated brush
· Convenient adjustment of plunge depth by means of feed wheel

Technical data	S-100LT	S-150LT	S-200LT
Tube size range mm/ inch:	OD 6 - 120 mm / 0,236 - 4,724"	OD 20 -170 mm / 0.787 -6.693"	OD 60 -220 mm 2.362 -8.661"
Wall thickness:	1 -8mm 0,039 - 0,315"	1 -8mm 0,039 - 0,315"	1 -8mm 0,039 - 0,315"
Electric drive:	Single-phase AC motor	Single-phase AC motor	Single-phase AC motor
Main voltage:	200/220 VAC (50/60 Hz)	200/220 VAC (50/60 Hz)	200/220 VAG (50/60 Hz)
Output:	1000 W / 4.5 A	1000 W / 4.5 A	1000 W / 4.5 A
Protection class:	II	II	II
Speed control:	6-step control	6-step control	6-step control
Dimensions:	143 x 366 383mm	143 x 466 x 483mm	145 x 525 x 542mm
Weight :	47kg	66kg	77kg
Item number	**1.2.4513**	**1.2.4512**	**1.2.4511**

Package includes:
· Tube saw with electric drive
· Insert collets 6-13 mm (just for S-100 LT)
· One saw blade
· One bottle of saw blade lubricating oil

	Item number
TRIPOD BASE FOR TUBE SAW S-100LT (AND ORS)	**1.2.4510**
MOBILE WORKSTATION S-LT WITH ADJUSTABLE TUBE SUPPORT	**1.2.4515**
SAW BLADE Standard saw blades are recommended for unalloyed and alloyed steels, premium saw blades for titanium, duplex and Inconel.	
STANDARD SAW BLADE	
STANDARD SAW BLADE for wall thicknesses of 1 – 3 mm, Ø 68 mm, 72 teeth, uncoated	**1.3.4520**
STANDARD SAW BLADE for wall thicknesses of 2.5 – 7 mm, Ø 68 mm, 44 teeth, uncoated	**1.3.4521**
STANDARD SAW BLADE for wall thicknesses of 0.5 – 3 mm, Ø 80 mm, 56 teeth, uncoated	**1.3.4524**
PREMIUM SAW BLADE	
PREMIUM SAW BLADE for wall thicknesses of 1 – 3 mm, Ø 68 mm, 72 teeth, coated	**1.3.4522**
PREMIUM SAW BLADE for wall thicknesses of 2.5 – 7 mm, Ø 68 mm, 44 teeth, coated	**1.3.4523**
PREMIUM SAW BLADE for wall thicknesses of 7 – 15 mm, Ø 100 mm, 44 teeth, coated	**1.2.4543**
CHAMFERING SAW BLADES FOR S-LT TUBE SAW Chamfering saw blades for 30°, Ø 90 mm, 20 teeth	**1.2.4543**
SAW BLADE LUBRICATING OIL, bottle, 250 ml	**1.3.4525**

TUBE SAW

CUTTING BLOCKS

Item number

CUTTING BLOCKS, quick lock system

- Locking mechanism, tool-free
- For quick and safe clamping during mounting work, without any additional clamping tools
- 90° kerf for separating tubes
- For saw blades measuring up to 1.0 mm thick
- Made of high-quality hardened tool steel

CUTTING BLOCK, DIN 11850/ ROW 1

DN	mm	Item number
10	12	1.1.4601
15	18	1.1.4602
20	22	1.1.4603
25	28	1.1.4604
32	34	1.1.4605
40	40	1.1.4606
50	52	1.1.4607
65	70	1.1.4608
80	85	1.1.4609
100	104	1.1.4610
125	129	1.1.4611
150	154	1.1.4612
200	204	1.1.4613

CUTTING BLOCK, DIN 11850/ ROW 2

DN	mm	Item number
10	13	1.1.4614
15	19	1.1.4615
20	23	1.1.4616
25	29	1.1.4617
–	30	1.1.4642
32	35	1.1.4618
40	41	1.1.4619
50	53	1.1.4620

CUTTING BLOCK (INCH)

inch	Item number
1/4"	1.1.4645
1/2"	1.1.4640
3/8"	1.1.4646
3/4"	1.1.4641
1"	1.1.4621
1 1/4"	1.1.4622
1 1/2"	1.1.4623
2"	1.1.4624
2 1/2"	1.1.4625
3"	1.1.4626
3 1/2"	1.1.4627
4"	1.1.4628
5"	1.1.4649
6"	1.1.4650

ISO CUTTING BLOCK

mm	Item number
13.5	1.1.4629
17.2	1.1.4630
21.3	1.1.4631
26.9	1.1.4632
33.7	1.1.4633
42.4	1.1.4634
48.3	1.1.4635
60.3	1.1.4636
76.0	1.1.4637
88.9	1.1.4638
114.3	1.1.4639
139.7	1.1.4647
168.3	1.1.4648

Other dimensions available on request

TUBE SQUARING SYSTEMS

PLANFIX 40 S

TUBE SQUARING EQUIPMENT

Tube squaring equipment is needed to achieve burr-free and perpendicular joint preparation for orbital welding. That's why Orbitec offers two machines – from the small and handy Planfix 40 S, to the large Planfix 115 S.

PLANFIX 40 S TUBE SQUARING EQUIPMENT

The Planfix 40 S is a powerful and handy facing device for cordless or mains-powered mobile or stationary use. It has a large inspection window, an indexable insert holder, indexable inserts that can be used on two sides and a feed with 0.1 mm scale graduation. Existing Orbitec planar steels can be used without an indexable insert holder as an alternative. The new indexable inserts are characterised by a long service life and can quickly and reliably machine unalloyed, low-alloyed and high-alloyed steels with high precision.

Scope of application				
Tube size range	**OD 3 – 40 mm / 0.386" – 1.575"**			
Wall thickness	**max. 4 mm**			
Technical data	**Planfix 40 S 230 V battery**	**Planfix 40 S 120 V battery**	**Planfix 40 S 230 V mains**	**Planfix 40 S 120 V mains**
Dimensions	275 x 250 x 135 mm	275 x 250 x 135 mm	415 x 200 x 135 mm	415 x 200 x 135 mm
Weight	3.4 kg	3.4 kg	4.0 kg	4.0 kg
Drive	Metabo	Metabo	Metabo	Metabo
Idle speed	0 – 500 / 0 – 1.850 rpm	0 – 500 / 0 – 1.850 rpm	0 – 1,100 / 0 – 3.100 / rpm	0 – 1,100 / 0 – 3.100 / rpm
Li-ion battery voltage	18 V / 5.2 Ah	18 V / 5.2 Ah		
Charger	ASC 30–36 V Air-cooled	ASC 30–36 V Air-cooled		
Mains voltage	230 – 240 V	115 V	230 – 240 V	110 – 120 V
Mains frequency	50 – 60 Hz	60 Hz	50 – 60 Hz	50 – 60 Hz
Max. current	3 A	3 A	5.1 A	10.5 A
Package includes				
Clamping attachment	•	•	•	•
Drive	•	•	•	•
Two Li-ion batteries	•	•		
Battery charging station	•	•		
Indexable insert holder				
Indexable insert				
Special cutting steel				
Tool kit	•	•	•	•
Transport case	•	•	•	•
Item number	**1.3.41071**	**1.3.41072**	**1.3.41073**	**1.3.41074**

	Item number
PLANFIX 40 S STAND	**1.3.41000**
PLANFIX 40 S COLLETS 1 set per tube outer diameter = 2 half-shells	**1.3.4102+Ø**

The OSK 38 weld head's collets can also be used.

TUBE SQUARING SYSTEMS

PLANFIX 115 S

PLANFIX 115 S TUBE SQUARING EQUIPMENT

The Planfix 115 S is a powerful facing and chamfering device with an angular gearbox for mains-powered mobile or stationary use. It has a large inspection window, a chip collector and
a feed with 0.1 mm scale graduation.

The equipment can be used with an indexable insert holder for indexable inserts that can be used on two sides or with the familiar Orbitec L planar steels as an option.

Scope of application		
Tube Size range	**OD 9.53 – 114.3 mm | 0.375" – 4.500"**	
Wall thickness	**max. 4 mm**	
Technical data	**Planfix 115 S 230 V mains**	**Planfix 115 S 120 V mains**
Dimensions	530 x 315 x 295 mm	530 x 315 x 295 mm
Weight	15 kg	15 kg
Drive	Metabo	Metabo
Idle speed	0 – 1,100 / 0 – 3.100 / rpm	0 – 1,100 / 0 – 3.100 / rpm
Mains voltage	230 – 240 V	110 – 120 V
Mains frequency	50 – 60 Hz	50 – 60 Hz
Max. current	5.1 A	10.5 A
Package includes		
Clamping attachment	•	•
Drive	•	•
Indexable insert holder		
Indexable insert		
Special cutting steel		
Tool kit	•	•
Transport box	•	•
Item number	**1.1.4200**	**1.2.4200**

PLANFIX 115 S COLLETS

1 SET per tube outer diameter = 2 half-shells

The OSK 115 weld head's collets can also be used.

Item number
1.3.4007+Ø

		Item number
	SPECIAL HSS CUTTING STEEL (WITH TIC COATING)	**1.2.4114**
	SPECIAL HSS CUTTING STEEL (WITH TIC COATING) for chamfering 30° for Planfix 115	**1.2.4111**
	SPECIAL HSS CUTTING STEEL (WITH TIC COATING) for J preparation 15°/R3 for Planfix 115	**1.2.4117**
	PLANFIX INDEXABLE INSERT HOLDER	**1.2.4105**
	INDEXABLE INSERT (WITH TIC COATING) Characterised by a long service life and can quickly and reliably machine unalloyed, low-alloyed and high-alloyed steels with high precision.	**1.2.4115**

DEBURRING TOOLS

SEVEN-PIECE UNIVERSAL DEBURRING TOOL SET — 1.2.4125
OD 3 – 16 mm | 0.118" – 0.630"

INTERNAL DEBURRER WITH NOZZLE — 1.2.4122

TRIANGULAR INTERNAL DEBURRER — 1.2.4123

EXTERNAL DEBURRER WITH INSERT — 1.2.4124

DEBURRING TOOLS AS A SET IN THE CASE — 1.2.4120

'UNIVERSAL' INTERNAL / EXTERNAL DEBURRER — 1.2.4121
Ø 10 – 56 mm | 0.394" – 2.205"

FOR CLEANING THE WELD JOINT:

SUPERFINE ABRASIVE PAD, roll, 10 m | 393.701", 115 mm wide | 4.528" — 1.1.4125

SC 80 WP POLISHING DISC, Ø 150 mm | 5.905" — 1.1.4126

CLAMP SHAFT FOR POLISHING DISC — 1.1.4127

PURGING ACCESSORIES

PURGING ACCESSORIES

PURGE BUNGS

Item number

PURGE HOSE with shutoff valve, 8 m — **1.3.0126**

SINTERED METAL VENT, 6 X 15 X 48 MM
(suitable for silicone plugs with 6 mm hole from tube, ID 15 mm) — **1.3.0127**

ALUMINIUM ADHESIVE TAPE, 50 x 0.09 mm, roll measuring 55 m — **1.1.4129**

PURGE BUNGS
- Conical
- Hole: Ø 6 mm | 0.236"
- Material: Silicone, clear
- Temperature-resistant up to 250 °C

Purge bungs for ID		
mm	inch	
10.5 – 14.5	0.413 – 0.571	1.3.5510
12.5 – 16.5	0.492 – 0.650	1.3.5512
14.0 – 18.0	0.551 – 0.709	1.3.5514
18.0 – 24.0	0.709 – 0.945	1.3.5518
23.0 – 29.0	0.906 – 1.142	1.3.5523
26.0 – 32.0	1.024 – 1.260	1.3.5526
29.0 – 35.0	1.142 – 1.378	1.3.5529
31.0 – 38.0	1.220 – 1.496	1.3.5531
36.0 – 44.0	1.417 – 1.732	1.3.5536
41.0 – 49.0	1.614 – 1.929	1.3.5541
47.0 – 55.0	1.850 – 2.165	1.3.5547
50.5 – 59.5	1.988 – 2.343	1.3.5550
56.0 – 65.0	2.205 – 2.559	1.3.5556
60.0 – 70.0	2.362 – 2.756	1.3.5560
64.5 – 75.5	2.539 – 2.972	1.3.5564
71.0 – 83.0	2.795 – 3.268	1.3.5571
79.0 – 92.0	3.110 – 3.622	1.3.5579
87.0 – 100.0	3.425 – 3.937	1.3.5587
94.0 – 107.0	3.701 – 4.213	1.3.5594

PURGE BUNGS SET
For an ID of 10.5 – 49 mm / 0.413" – 1.929" (10 x 2 bungs) in a case — **1.3.5501**

PURGE BUNGS SET
For an ID of 47 – 107 mm / 1.850" – 4.213" (9 x 2 bungs) in a case — **1.3.5502**

Item number

FLEXIBLE PURGE DAMS

- Saves gas and time
- Heat-resistant up to 340 °C
- Can be used in all positions
- Easy to pull through elbows

SC Profi, fully mounted with two sealing lips (340 °C), connecting axis and connection hose with a type 21 rectus nipple

Type	Connection	ID (mm)	ID (inch)	
SC Profi Ø 17 mm	80 mm spring connection	13 – 16	0.512" – 0.630"	**1.1.6017**
SC Profi Ø 21 mm		16 – 20	0.630" – 0.787"	**1.1.6021**
SC Profi Ø 24 mm		18 – 23	0.709" – 0.906"	**1.1.6024**
SC Profi Ø 30 mm		23 – 29	0.906" – 1.141"	**1.1.6030**
SC Profi Ø 39 mm		29 – 38	1.141" – 1.496"	**1.1.6039**
SC Profi Ø 45 mm		36 – 43	1.417" – 1.693"	**1.1.6045**
SC Profi Ø 57 mm	120 mm flex connection	42 – 53	1.654" – 2.087"	**1.1.6057**
SC Profi Ø 60 mm		45 – 58	1.772" – 2.283"	**1.1.6060**
SC Profi Ø 70 mm		55 – 67	2.165" – 2.638"	**1.1.6070**
SC Profi Ø 82 mm	150 mm flex connection	68 – 80	2.677" – 3.150"	**1.1.6082**
SC Profi Ø 95 mm		79 – 92	3.110" – 3.622"	**1.1.6095**
SC Profi Ø 117 mm		98 – 114	3.858" – 4.488"	**1.1.6117**
SC Profi Ø 145 mm		120 – 136	4.724" – 5.354"	**1.1.6145**
SC Profi Ø 176 mm		150 – 168	5.905" – 6.614"	**1.1.6176**
SC Profi Ø 182 mm		155 – 170	6.102" – 6.693"	**1.1.6182**
SC Profi Ø 220 mm	250 mm flex connection	190 – 205	7.480" – 8.070"	**1.1.6220**
SC Profi Ø 231 mm		195 – 215	7.677" – 8.464"	**1.1.6231**

WS PLUS PURGE GAS CYLINDER

Type	ID (mm)	ID (inch)	
WS Plus purge gas cylinder, 8" (340 °C)	180 - 215	7.086" – 8.465"	**1.1.6180**
WS Plus purge gas cylinder, 9" (340 °C)	215 - 240	8.465" – 9.449"	**1.1.6215**
WS Plus purge gas cylinder, 10" (340 °C)	240 - 265	9.449" – 10.433"	**1.1.6240**
WS Plus purge gas cylinder, 11" (340 °C)	265 - 290	10.433" – 11.417"	**1.1.6265**
WS Plus purge gas cylinder, 12" (340 °C)	290 - 315	11.417" – 12.402"	**1.1.6290**
WS Plus purge gas cylinder, 13" (340 °C)	315 - 330	12.402" – 12.992"	**1.1.6315**

Other flexible purge dams available on request.

10 M PULL ROPE (insulated) with carabiner hook **1.1.6232**

FLEXIBLE PURGE DAMS / PURGE HOSE COUPLING **1.1.6234**
OD 6 mm

Flexible purge dam / OXY measurement connection (from SC Profi Ø 57 mm) available on request.

MEASURING DEVICES

The first step to the perfect weld joint

PURGING

Proper purging is absolutely essential to guarantee high-quality welding of high-alloyed, corrosion-resistant components.

Our Oxy EVO oxygen analyser can be connected to our orbital welding controllers for the purpose of inspecting and documenting the residual oxygen content and evaluated.

You are free to choose the value in ppm entered in the controller.

Unless specified otherwise, a value < 30 ppm is generally sufficient for starting welding. The controller will not allow welding to commence until the measured value drops below the entered value.

The equipment is calibrated so that it measures with an accuracy of $^{+}/_{-}$ 2 ppm in the welding-related area below 30 ppm in the case of inert gases.

Analysers that display values as percentages are not recommended
→ 0.1% = 1,000 ppm!

Examples of tempering colours:

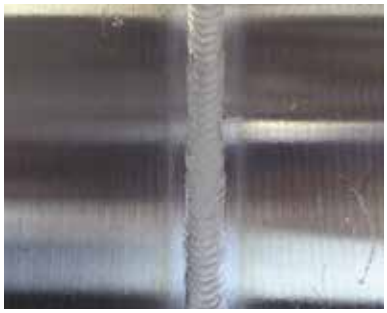

7 ppm
0.0007%

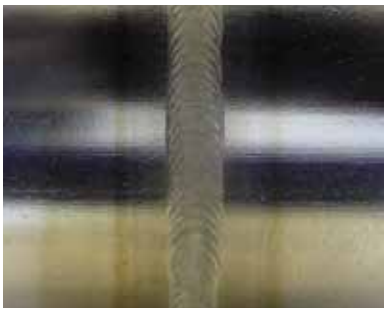

27 ppm
0.0027%

500 ppm
0.05%

Item number

OXY SMART OXYGEN ANALYSER, incl. accessories — **1.2.5004**

- Battery-powered equipment
- For inert gases
- For gases containing H_2 (max. 10%)
- Measuring cell made of zirconium oxide (maintenance-free), long service life thanks to smart software
- Robust for use on construction sites (rubber protective frame)
- Dust- and splash-proof, also for use in high humidity
- Intuitive user guidance due to symbols
- Colour-illuminated display
- Battery charge indicator
- Error message if a fault occurs

Measuring device technical data:

Measuring range	5 – 999 ppm O_2
Dimensions (L x W x H)	160 mm x 80 mm x 35 mm
Weight	0.35 kg
Supply voltage	12 V
Charge cable	100 – 240 V with various adapter plugs
Battery life	9 h due to Li-ion technology

Package includes:

- Oxygen analyser
- Charging cable with adapter plugs for worldwide use
- Hose set, 1 m, incl. filter and probe
- Calibration certificate
- Transport case

SPARE PLASTIC HOSE for OXY SMART, — **1.3.5016**

1 m, with particle filter and stainless steel probe

SPARE FILTER — **1.3.5015**

OXYGEN ANALYSERS AND PURGE PRESSURE ANALYSERS

OXY EVO, OXY EVO PPA

Item number

OXY EVO OXYGEN ANALYSER (Autorange) **1.2.5000**

- Extremely easy menu navigation
- For inert gases and gases containing H_2 (max. 10%)
- Measuring cell made of zirconium oxide (maintenance-free)
- 3.5" colour touch display
- USB interface for exporting documentation
- Digital and analogue interface and Bluetooth for communication with our orbital welding controllers and other SPS
- Activation and evaluation exclusively using the digital interface
- User-definable threshold and alarm adjustment
- Acoustic signal generator
- Display has a coloured background outside the target values
- Autorange 100 – 240 V

Technical data:

Measuring range	5 ppm – 21% O_2
Ambient temperature	0 – 45 °C
Measuring accuracy	+/- 0.3 mV (EMK sensor)
Heat-up time	3 – 5 min
Response time	approx. 2 seconds for changes
Dimensions (L x W x H)	180 mm x 210 mm x 85 mm without handle
Mains voltage	100 – 240 V AC
Heating cycle load	approx. 40 VA
Standard load	approx. 20 VA
Weight	2.1 kg

Package includes:

- Oxygen analyser
- Power cable
- Hose set, 3 m, incl. filter and probe
- Calibration certificate
- Transport case

OXY EVO PPA OXYGEN ANALYSER (Autorange) **1.2.5003**

The additionally installed purge pressure module can be used to measure the purge gas pressure inside the tube before and during welding. Perfectly flat, repeatable root formations can be achieved by regulating the internal pressure – especially for smaller tube diameters.
Documentation can take place by connecting to the TIGTRONIC ORBITAL, TIGTRONIC COMPACT and EVO controllers. Current values can also be saved on a USB stick following a previously defined interval.

Technical data (in addition to OXY EVO):

Input voltage	24 V (POWER supplied by Oxy EVO)
Calibrated measuring range	0 – 2,500 Pa

Package includes (in addition to OXY EVO):

- In-built purge pressure module
- 3 m measuring hose
- 6 mm T-piece
- Calibration certificate (pressure)

PPA COM CABLE FOR OXY EVO **1.3.5035**

for connecting to TIGTRONIC ORBITAL and EVO, 3 m

PURGE PRESSURE ANALYSER

ACCESSORIES, PPA 2500

Item number

EVO COM CABLE FOR COMMUNICATION AND DOCUMENTATION

COM CABLE for OXY EVO for connecting to TIGTRONIC ORBITAL and EVO controllers — **1.3.5011**

USB DATA CABLE for OXY EVO for connecting to EVO and PC controllers, 2 m — **1.2.5008**

SPARE PLASTIC HOSE for OXY EVO, 3 m, with particle filter and stainless steel probe — **1.3.5014**

SPARE FILTER — **1.3.5015**

PPA 2500 PURGE PRESSURE ANALYSER — **1.3.5200**

The PPA 2500 purge pressure analyser can measure the purge gas pressure inside the tube before and during welding.Perfectly flat, repeatable root formations can be achieved by regulating the internal pressure – especially for smaller tube diameters. Documentation can take place by connecting to the TIGTRONIC ORBITAL and EVO controllers.

Technical data:

Input voltage	24 V (using the controller)
Calibrated measuring range	0 – 2.500 Pa
Weight	0.6 kg
Dimensions (L x W x H)	41 mm x 80 mm x 160 mm

Package includes:
- Purge pressure analyser
- Measuring hose
- 6 mm T-piece
- Calibration certificate
- Transport case

SERVICE

SERVICE

RENTAL SERVICE, REPAIR SERVICE, FINANCING, CONTRACT WORK

RENTAL SERVICE – USING INSTEAD OF INVESTING
You can rent all the equipment from our extensive rental stock as needed and at an affordable price.

The advantages of hiring:
· Equipment capacity that suits your current needs
· Fixed prices per usage period
· Reliable basis for calculating costs
· No investment risk
· High availability to suit changing requirements

Your business card on the construction site: The orbital workstation

We provide a mobile workstation **free of charge** when you hire a complete system.

We send complete systems with mobile workstations in special containers.

Purchase option: How you benefit
If you decide to buy the system within four weeks of the rental period ending, we will deduct the rental costs from the purchase price within 30 calendar days.

REPAIR AND MAINTENANCE
It goes without saying that we offer a quick and reliable repair and maintenance service. Our comprehensive rental service helps to bridge equipment downtimes.

HIRE PURCHASE / LEASING
We'd be delighted to send you ...
· a hire purchase quotation for instalments payable over 3, 6 or 12 months
· a leasing quote through our leasing partners.

MEDIATION FOR CONTRACT WORK
We are delighted to act as mediators for our customers (who have suitable orbital welding equipment and qualified staff) with respect to contract work.

TRAINING

In most cases, inadequate weld joint quality isn't due to the equipment; often, it can be traced back to the operating staff having insufficient application-related experience during orbital welding. This is a problem that every user should address in good time, given that this complex welding process is increasingly being used and that there is a shortage of trained personnel.

Orbitec's employees are highly qualified and have many years of practical experience.
We provide complete device-related equipment with all the necessary peripheral equipment and auxiliary tools and offer our customers TWO- or THREE-day training courses at regular intervals.

In cooperation with TÜV, inspections according to DIN EN ISO 14732 can also be carried out on Orbitec's premises.

Some of the topics covered in our training courses:

- Explanation of the process
- Equipment technology, examples from our product range
- Selecting semi-finished products
- Selecting gases
- Preparing weld joints
- Properly purging
- Properly tacking
- Creating welding programs
- Using the equipment technology
- Performing sample welding with various pieces of equipment on different materials
- Quality assessments before and after welding
- Using materials
- Adding additional materials
- Practical experience
- Special training priorities, especially for the areas of high-purity gas supply in semiconductor production or the pharmaceutical industry (e.g. residual oxygen control) or in line with customer requirements

GENERAL TERMS AND CONDITIONS OF WARRANTY

A warranty period of 24 months in one-shift operation is provided with Orbitec equipment. However, batteries, measuring cells, gas level monitors and consumables are not covered by the warranty.
The warranty period commences at the time of transfer (in the case of shipment, it commences when the goods leave our factory). During this period, Orbitec guarantees all products against material and manufacturing defects:

- Investigation of any faults free of charge
- Replacement of any defective parts (excluding consumable parts) free of charge
- Professional repair service free of charge
- For the above to apply, the defects must not be caused by improper handling or use, and only genuine Orbitec accessories must be used.

All work covered by the warranty will be performed at Orbitec's head office in Seligenstadt / Germany. This means that the customer must cover all costs incurred in transporting the goods to and from Seligenstadt.

The warranty shall be rendered void someone not authorised by Orbitec has opened or tampered with the equipment.

This information shall apply without prejudice to the statutory warranty claims and based on our General Terms and Conditions of Business.

GENERAL TERMS AND CONDITIONS OF BUSINESS

General Terms & Conditions of Business

1. General
These terms and conditions also apply to future business transactions conducted between the contracting parties. These General Terms and Conditions of Business apply exclusively. The General Terms and Conditions of Business of the purchaser are only valid if the supplier has expressly approved their validity in writing.

2. Final specification of services
The aspects of this specification of services provide a comprehensive and conclusive definition of the delivery item.

3. Correct and punctual deliveries
The contract is concluded under the reservation of correct and punctual delivery by the supplier. [The contractor must immediately inform the principal of the non-availability of the delivery item and in the case of rescission the contractor must be reimbursed the equivalent amount immediately.]

4. Payment conditions and supplementary performance
Payment is due in full upon delivery or acceptance. The principal is, without additional declarations from the seller, in default 14 days after the due date for payment if he has not paid. In the case of the presence of defects, the principal is not entitled to retain possession of the goods, unless the delivery was evidently faulty or the principal is clearly entitled to the right to decline acceptance of the work; in such cases, the principal is only entitled to retain possession if the retained amount covers to a reasonable extent the defects and any foreseeable costs for subsequent performance (in particular the costs for eliminating the fault). The principal is not entitled to assert claims and rights for defects if he has not made any payments due and the amount due (including any payments made) covers to a reasonable extent the value of the delivery, with faults, or the work.

5. Reservation of proprietary rights
(1) The delivery item remains the property of the contractor until fulfilment of all contractual obligations to the principal.
(2) During the period of reservation of proprietary rights, the principal is prohibited from taking out a lien or assigning the item as security. Further disposal is only permitted to distributors in the ordinary course of business and subject to the conditions that payment of the equivalent value for the delivery item is made to the principal. The principal must also agree with the purchaser that the purchaser only acquires the proprietary rights upon this payment.
(3) The principal is allowed to process the delivery item or combine it with other objects. The processing or combination (hereinafter referred to collectively as “processing” and with regard to the delivery item: “processed“) occurs when an object is designated as a “new item” following the processing of an existing item. The principal stores the new item for the contractor with the due care and prudence of an ordinary business.
In the event of processing with other objects not belonging to the contractor, the contractor is entitled to co-ownership of the new item for the amount of the share, which results from the proportion of the value of the processed or combined delivery item to the value of the other processed goods at the time of processing. If the principal acquires sole ownership of the new item, both the principal and contractor agree that the principal shall grant the contractor co-ownership of the new item for the proportion of the value of the processed delivery item to the other processed goods at the time of processing.
(4) In the case of disposal of the delivery item or the new item, the principal hereby assigns his rights for further disposal against the purchaser to the contractor by way of security, without the need for further declarations. The assignation also includes outstanding balance claims. However, the assignation is only applicable for the amount that corresponds to the price of the delivery item invoiced by the contractor. The part of the balance assigned to the contractor is to be satisfied prior-ranking.
(5) If the principal combines the delivery item or the new item with moveable objects, he, without the need for further declarations, also assigns his claim, which is due to him as payment for the connection, to the contractor, with all ancillary rights by way of security for the amount in proportion of the value of the delivery item or new item to the other combined goods at the time of the combination.
(6) Except for revocation, the principal is authorised to forfeit the assigned debts. The principal shall immediately forward the payments for the assigned debts for the amount of the secured debt to the contractor. In the event of reasonable cause, in particular delay in payment, cessation of payments, initiation of insolvency proceedings, act of protest or reasonable evidence for excess indebtedness or threatened payment incapacity, the contractor is entitled to revoke the forfeiture authorisation of the principal. In addition, the contractor can, after a prior warning of notifying the debtor of the assignment or of utilizing the assigned claims subject to observance of an adequate respite, notify the debtor of the assignment, utilize the assigned claims, and demand that the principal notify the customer of the assignment.
(7) In the case of establishing prima facie evidence, the principal must provide the contractor with the necessary information and documents for the assertion of his rights against the customer.
(8) For charges, seizures or other dispositions or intervention by third parties, the principal must immediately inform the contractor thereof.
(9) Where the realizable value of all security rights, to which the contractor is entitled, exceeds the amount of all secured claims by more than 10%, the contractor at the request of the principal can approve a partial release of the security; the contractor has the choice between the various security rights.
(10) In the event of contractual breaches by the principal, in particular late payment, the contractor is entitled to demand without notice the withdrawal of the delivery item or new item and / or rescind the contract; the principal is obliged to surrender the item. The demand for the return of a delivery item or new item does not constitute cancellation of the contract by the contractor unless expressly stated.

6. No liability for damages from distributors
The seller is not liable for material damage of the delivery which he procured from third parties and distributed to the customer unchanged; the liability for intent and gross negligence remains unaffected.

7. Minor defects
The liability for defects does not apply to insignificant deviations from the agreed conditions or to minor impairments to usability.

8. Choice of supplementary performance
The contractor is entitled to choose between remedial and replacement options in all cases. If the subsequent performance fails, then the principal has the right to reduce or, at his own discretion, rescind the contract.
[This does not affect the rights of the principal in accordance with the statutory provisions and conditions of this contract to demand damages in place of performance.]

9. Number of improvement attempts
If the principal demands damages in place of performance or even self-remedy of defects, this isonly provided after the second attempt at repairing the item fails. The statutory provisions regarding the dispensability of setting a grace period shall remain unaffected.

10. Expenses for supplementary performance
The expenses necessary for the purposes of subsequent performance shall be borne by the principal; if higher expenses are incurred as the deliveries or services in question are to be transported to a location other than that of the subsidiary of the principal, unless this is in the course of correct and proper use.

11. Liability (without delay of delivery / impossibility)
(1) The contractor is liable in cases of intent or gross negligence of the contractor or an agent or agents in accordance with statutory provisions. In addition, the contractor is liable only under the Product Liability Act in cases of loss of life, limb or health or because of culpable violation of essential contractual obligations. The claim for damages for the breach of significant contractual obligations is, however, restricted to the contractual foreseeable damage. The liability of the contractor in cases of gross negligence is also restricted to contractual foreseeable damage, if none of the exceptions mentioned in Clause 2, of Para. 1 are present.
(2) The liability for damages caused by the delivery item to legal interests of the principal, e.g. damage to other matters, is, however, fully excluded. This does not apply in cases of intent or gross negligence or injury to life, limb or health.
(3)The aforementioned provisions in paragraphs 1 and 2 extend to damages in addition to performance and compensation in place of performance, regardless of the cause of action, in particular because of defects, breach of obligations arising from the debt ratio or tort actions. They also apply to claims to cover expenses. The liability for delay is determined in accordance with paragraph 12. However, the liability for impossibility is covered under paragraph 13.
(4) A change in the burden of proof to the detriment of the principal is not connected to the above regulations.

12. Liability in the case of delayed delivery
(1) If non-observance of time periods is due to force majeure, for example, mobilisation, war, riot or similar events, e.g. strike or lockout, the time periods shall be extended accordingly.
(2) The contractor is liable for delay in performance of services in cases of intent or gross negligence on his part or on the part of an agent or agents in accordance with statutory provisions. The liability of the contractor in cases of gross negligence is restricted, however, to contractual foreseeable damage, if none of the exceptions stated in clause 5 of this provision are present. Furthermore, the liability of the contractor due to delayed performance for damages, in addition to performance, and in place of performance, is restricted to 5% of the value of deliveries / services. Additional claims by the principal, even after expiry of a deadline to the contractor, for performance, are excluded. The aforementioned restrictions do not apply to liability for injury to life, limb or health. A change in the burden of proof to the detriment of the principal is not connected to the above-mentioned regulations.

13. Liability in the case of impossibility
The contractor is liable for the impossibility of delivery in cases of intent or gross negligence of the contractor or an agent or agents in accordance with statutory provisions. The liability of the contractor is in cases of gross negligence limited to contractual, foreseeable damage, if no exceptions are present that are stated in clause 5. In addition, the contractor's liability for damages due to impossibility and for compensation for expenses is restricted to 10% of the value of deliveries / services. Additional claims by the principal due to impossibility of delivery are excluded. This limitation shall not apply in cases of intent, gross negligence or injury to life, limb or health. The right of the principal to rescind the contract remains unaffected. A change in the burden of proof to the detriment of the principal is not connected with the above regulations.

14. Right to withdraw from the contract

The principal may only, within the framework of the statutory provisions of the contract, withdraw from the contract if the contractor has performed a contractual breach; in the event of defects, however, the statutory conditions remain effective. In the event of contractual breaches, the principal must declare within an appropriate timeframe at the request of the contractor whether he is withdrawing from the contract due to contractual breach or he insists on the delivery.

15. Limitation of actions
(1) The limitation of actions for claims and assertion of rights due to defects in deliveries / services, regardless of the cause in law, is one year for new items and barred for used items. This does not apply, however, for the cases specified in § 479 S. 1 of the German Civil Code (BGB) (Right of recourse). The time periods stated in clause 2 are subject to a limitation period of three years.
(2) Statute-barred or limitation regulations in accordance with S. 1 also apply to all claims for damages against contractors who are connected to the damage – regardless of the cause of action of the claim. Insofar as claims for damages of any type arise against contractors who are not connected to the damage, the limitation period stated in § 1 S. 1 applies.
(3) The limitation period regulations in accordance with S. 1 and S. 2 apply with the following provisions:
a) The limitation periods in general do not apply in the case of intent.
b) The limitation periods also do not apply if the contractor intentionally misrepresented the defects by silence or if the contractor took out a guarantee for the conditions of the deliveries / services. If the contractor intentionally misrepresents the defects, then in place of the limitation periods listed in S. 1, the statutory limitation applicable to fraudulent intent apply [§ 438 S. 1 No. 3 (other deliveries) and § 634a S. 1 No. 1 German Civil Code (BGB) (Manufacture / Maintenance / Change of an item or Planning / Monitoring Services) and No. 3 (other services)] to the exclusion of the period extension for fraudulent intent in accordance with §§ 438 S. 3 or 634 a S, 3 German Civil Code (BGB)),if no other exception is present in accordance with this S. 3.
c) The limitation periods apply to claims for damages and not to cases of injury to life, limb or health, infringement of freedom, claims for product liability, gross negligence or breach of other significant contractual duties.
(4) The period of limitation for all claims commences upon delivery of the items and for services upon acceptance.
(5) Insofar as nothing else is expressly agreed, the statutory terms and conditions on the commencement of the limitation period, suspension of the statute of limitations, the suspension and recommencement of periods remain unaffected.
(6) A change of the burden of proof to the detriment of the principal is not connected with the aforementioned regulations.

16. Recourse to contractor in accordance with § 478 of the German Civil Code (BGB)
Recourse to the purchaser against the seller in accordance with § 478 German Civil Code (BGB) (Recourse to the Contractor) only exists if the purchaser has not come to any agreements with the seller resulting from the legal defects claims.

17. Part performance
Part performances are permitted insofar as they are considered just and reasonable by the purchaser.
18. Offsetting
The purchaser can only offset such claims that are undisputed and final.

19. Place of jurisdiction
The sole place of jurisdiction for all disputes arising from this contract is the residence of the contractor, if the contracting partner of the contractor is the purchaser.

20. Applicable law
This contract is governed by the law of the Federal Republic of Germany to the exclusion of the United Nations Convention on Contracts for the International Sale of Goods.

GENERAL TERMS AND CONDITIONS OF HIRE

1. General
These Terms and Conditions shall also apply to future business transactions between the contracting parties.
These General Terms and Conditions of Hire shall apply exclusively. The customer's General Terms and Conditions of Business are only valid to the extent that the supplier has expressly approved the same in writing.

2. Rental period
The rental period is calculated according to full calendar days. The rental period commences when the equipment is dispatched to the place of use and ends when the equipment is returned to the Lessor. There is no minimum rental period.

3. Dispatch and transfer of risk
The equipment is dispatched at the Lessee's expense using normal shipping methods, unless the Lessee has expressly stipulated a certain shipping method. The cost of transport insurance shall be borne by the Lessee. The transfer of risk commences when the Lessee collects the equipment from the Lessor and ceases when they return the equipment to the Lessor.

4. Using the rental object
The rented equipment is the Lessor's property. The Lessee must use the equipment with care, adhere to all obligations relating to the possession, use and preservation of the rental object, and comply with the Lessor's recommendations for maintenance, care and use. The Lessee shall be charged separately for any necessary repairs arising from improper use. The Lessor's status and repair report that is made available to the Lessee forms the basis of calculating any related charges.

5. Liability and guarantee
To the exclusion of other claims, the Lessor is responsible for the rented equipment being in a functional state at the time of the transfer of risk as follows: If the rented equipment has a fault that renders its capability for contractual use invalid or reduces its scope of use to such an extent equivalent to invalidation at the time of the transfer of risk, the Lessor may at their own discretion eliminate the fault, replace the faulty equipment or withdraw from the contract. The rental price shall be reduced accordingly for the duration of the fault. The Lessor shall only be liable for damage arising from the Lessee's use of the rental object if it is based on a fault that existed at the time of transfer of risk. The liability extends to the cost of repairs to the amount of the Lessor's rental price claim that any subsequently specified claim for damages must be invoiced with. Any other claims made the Lessee that extend beyond this, particularly claims for damages, are excluded. Cases of fatal or serious personal injury and harm to health are excluded from the limitation of liability clause.

6. The Lessee's liability
The Lessee is liable vis-à-vis the Lessor for all damage arising from non-intended and improper use of the rental object. The Lessee shall also be liable for damages arising from accidental loss, accidental damage and theft. The Lessee undertakes to insure the rental object against loss and/or damage. The Lessee shall be liable for the replacement value in the event of total loss.

7. Third-party rights
The Lessor shall keep the equipment free from all third-party charges, use and liens. They are obligated to immediately inform the Lessor by providing all the necessary documents if the rented equipment is nevertheless impounded or otherwise used by third parties during the term of the rental contract. The Lessee shall bear all the costs necessary to discontinue such third-party interference.

8. Payment
The rental price shall be due immediately on receipt of the invoice and shall be payable without deductions.

9. Returning the rental object
The Lessee must return the rented equipment to the Lessor at their own risk and expense as soon as the rental period ends.

10. Deposit
The Lessor reserves the right to charge a deposit. The deposit is payable before the rental object is transferred and shall be returned or charged against any unpaid rental invoices once the rental object has been returned.

11. Final provisions
No verbal side agreements have been made. Modifications to this contract must be made in writing. Should a provision of this contract be legally invalid, this shall not affect the validity of the remaining provisions. Incidentally, the Lessor's General Terms and Conditions of Business apply in addition to these General Terms and Conditions of Hire.

TABLE

TUBE OUTER DIAMETER

Nominal width DN	DIN DIN 11850	ISO EN ISO 1127	inch ASME	OD (mm)	OD (inch)
				3.17	0.125
				6.00	0.236
			1/4"	6.35	0.250
	6			8.00	0.315
			3/8"	9.53	0.375
	8			10.00	0.394
		10.2		10.20	0.402
				12.00	0.472
			1/2"	12.70	0.500
	10			13.00	0.512
8		13.5		13.50	0.531
				15.88	0.625
				16.00	0.630
10		17.2		17.20	0.677
				18.00	0.709
	15			19.00	0.748
			3/4"	19.05	0.750
				20.00	0.787
15		21.3		21.30	0.839
				22.00	0.866
	20			23.00	0.906
			1"	25.40	1.000
20		26.9		26.90	1.059
				28.00	1.102
	25			29.00	1.142
				30.00	1.181
25		33.7		33.70	1.327
	32			35.00	1.378
			1 1/2"	38.10	1.500
				40.00	1.575
	40			41.00	1.614
32		42.4		42.40	1.669
				44.50	1,752
40		48.3		48.30	1.902
			2"	50.80	2.000
				51.00	2.008
				52.00	2.047
	50			53.00	2.087
				54.00	2.126
50		60.3		60.30	2.374
			2 1/2"	63.50	2.500
	65			70.00	2.756
65		76.1		76.10	2.996
			3"	76.20	3.000
	80			85.00	3.346
80		88.9		88.90	3.500
			4"	101.60	4.000
	100			104.00	4.094
				108.00	4.252
100		114.3		114.30	4.500
			5"	127.00	5.000
	125			129.00	5.079
125		139.7		139.70	5.500
			6"	152.40	6.000
	150			154.00	6.063
				165.10	6.500
150		168.3		168.30	6.626
				177.80	7.000
				190.50	7.500
	200			204.00	8.031
200		219.1	8"	219.10	8.626
250		273	10"	273.00	10.748

Collets in stock for OSK weld heads:

Special dimensions available on request

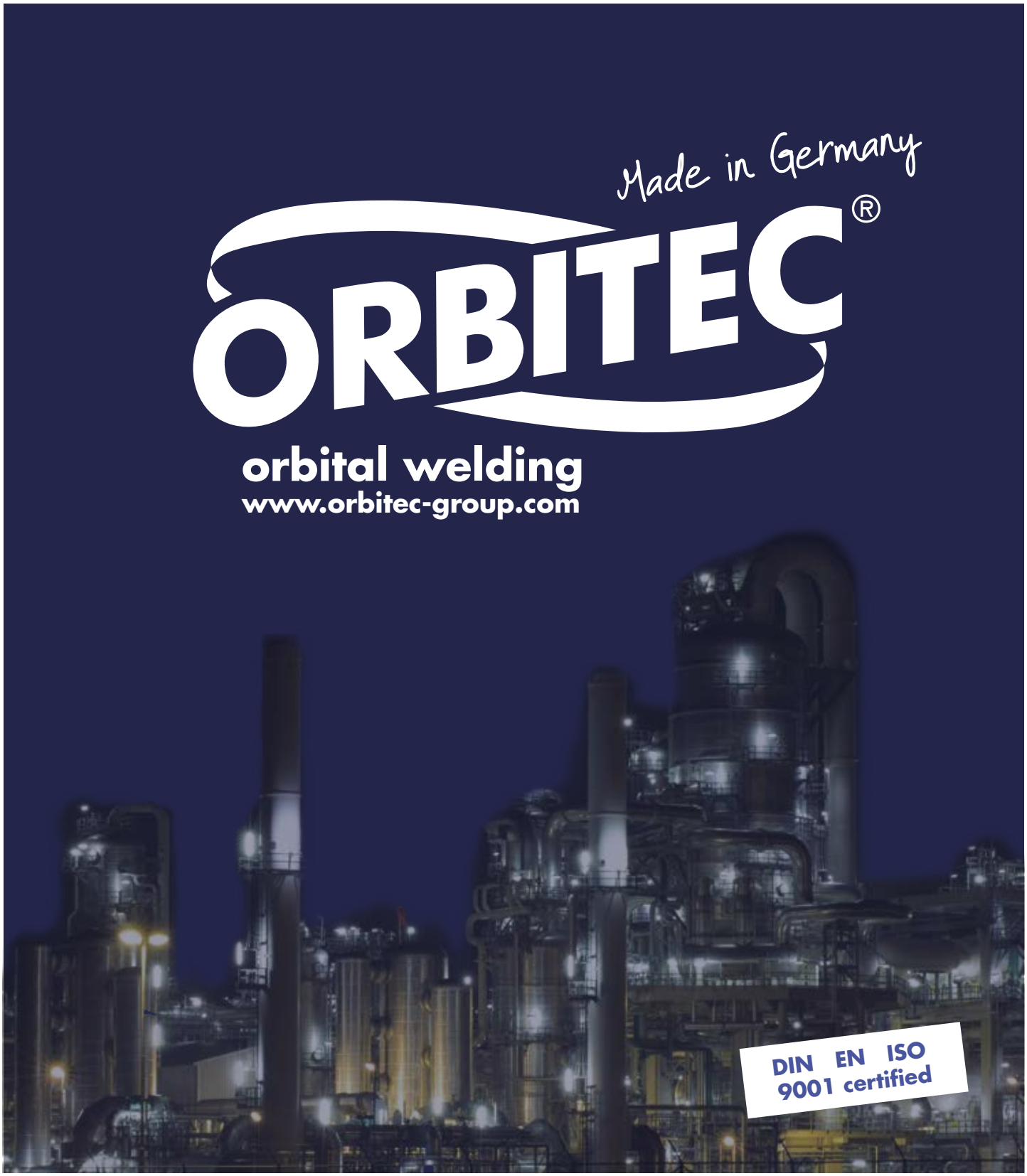

HEADQUARTERS:
Orbitec GmbH
Im Mittelfeld 2
D-63500 Seligenstadt / Germany
Phone: +49 6182 / 78 69 3 – 0
Fax: +49 6182 / 78 69 3 – 10
Email: info@orbitec-group.com
Web: www.orbitec-group.com

YOUR LOCAL REPRESENTATIVE:
Orbitec Limited
Unit 40, Royal Scot Road, Pride Park
Derby, DE24 8AJ
UK
Phone: +44 (0) 1332 296193
E-Mail: info@orbitecuk.com
Web: www.orbitecuk.com